ZeroErr

eRob

Rotary Actuator

User Manual

Version 3.46



Build Robot Fast

Copyright © 2026 ZeroErr All Rights Reserved.

SAFETY GUIDE

Before installing, operating, maintaining, or inspecting this product, please be sure to read this SAFETY GUIDE and fully understand the information provided in this user manual and appendices before using the product. Mishandling the eRob rotary actuator module may cause harm to personnel or damage to property. Therefore, it is essential that the operator read and understand this manual thoroughly.

It is recommended to keep this manual in a readily accessible location for easy reference during operation and maintenance of the product.

It is crucial to follow the SAFETY GUIDE outlined in this manual.

• NOTATION

Symbol	Definition
	**DANGER:** This indicates an imminently hazardous electrical usage situation which, if not avoided could result in death or serious injury.
	**DANGER:** This indicates an imminently hazardous situation which, if not avoided, could result in death or serious injury.
	**WARNING:** This indicates a potentially hazardous electrical situation which, if not avoided, could result in personal injury or serious equipment damage.
	**WARNING:** This indicates a potentially hazardous situation which, if not avoided, could result in personal injury or serious equipment damage.
	**WARNING:** This indicates a hot surface that can create a hazard, which if touched, could result in personal injury.
	**CAUTION:** This refers to a situation which, if not avoided, could result in equipment damage.

• Please Adhere to the Following Guidelines to Avoid Personal Injury:

	**DANGER:**
1. Set Appropriate Protection Limits: An incorrect target command from the host controller when operating the rotary actuator in torque mode may cause unintended runaway motion. Set appropriate protection limits on the host controller and the servo driver, including position, speed and current limits, to protect personnel and equipment.	
2. Perform Risk Assessment: Machine manufacturers must perform a risk assessment on the machine and take appropriate measures to ensure unexpected movements will not result in any personal injury or property damage. More demands may be placed on professionals after risk assessment.	
3. Assembly Precautions: Make sure the rotary actuators are properly and securely in place without the danger of accidental falls. Our company is not responsible for any damage caused by abnormal operation.	

⚠	WARNING:

1. Conduct the Initial Test Without Load:
To prevent accidents during the initial test, run the rotary actuator without a load (not connected to the drive shaft). Failure to do so may result in injury.

⚠	WARNING:

1. Beware of Hot Surfaces:
During operation of the motors, depending on their ingress protection level, the surfaces can be very hot. The surface temperature will exceed 85°C, beware of minor burns. Measure the temperature and wait until the motor cools below 40°C before touching it.

2. Unmounted No-Load Operation:
The module generates heat due to friction, lubricant agitation and holding-brake power consumption, even during no-load operation. Heat dissipation may be insufficient before the module is mounted, which may trigger temperature protection. Be aware of hot surfaces and burn hazards. For no-load power consumption, refer to Chapter 26.

If this product is used in environments where human safety or material losses are at stake, it is crucial to install safety devices that can prevent accidents even if the output control is disabled due to damage.

- Please Adhere to the Following Guidelines to Avoid eRob Damage:

⚠	WARNING:

1. Beware of the risk of metal debris entering connector gaps:
Before installation, thoroughly clean the outer surface of the housing to ensure the installation environment is free of metal debris. Common sources of metal debris include: Metal shavings generated when tightening or loosening screws during robot installation. Metal particles produced from grinding or fitting machined parts. Broken copper strands from cable manufacturing or handling. During installation, wiring, and related operations, ensure that no metal debris falls into: The electrical connectors on the rear cover of the joint (including CAN, EtherCAT, RS485, IO, multi-turn battery, and power interfaces, as well as the gaps between these connectors), The through-holes, or The joint’ s hollow shaft gaps (where the output encoder disk is mounted). Failure to prevent this may result in communication errors or electrical faults.

2. Do Not Plug or Unplug Power Cable While Power ON:
Please make sure to perform wiring and inspection tasks only after confirming that the Power LED indicator light has turned off by itself.

3. Do Not Plug or Unplug CAN Cable While Power ON:
Since the electrical level of the CAN_GND at both ends of the host controller and the actuator may be different when they are not wired, the voltage difference between the CAN_GND at both ends will cause damage to the CAN interface at the moment of connection.

4. Do Not Plug or Unplug RS485 Cable While Power ON;
Due to the possible difference in the ground potential between the master controller and the eRob module when not connected, upon connection, the voltage difference between the two ground points may lead to damage to the RS485 interface.
NOTE: It is important to note that the process of plugging and unplugging cables while the power is on should include the power from power supply, “eRob to PC Connector”, and controller. This means that all three components need to be powered OFF during the cable connection or disconnection process.

5. Connect Power Terminals Properly and Securely:
Refer to Section 5.10

⚠	WARNING:

6. Ground Module Housing:
If the eRob joint housing is not properly grounded, static charge may accumulate on the housing, potentially causing it to become electrically charged. Proper grounding of the housing is therefore required. For detailed grounding instructions, refer to Chapter 6, specifically Subsection 6.6.3.

7. Use ZeroErr's Proprietary Multi-Turn eRob Battery:
A rotary actuator with multi-turn counting function will have an extra battery being packaged in the box, which has a stable voltage, a temperature range of -55°C~85°C, and a normal working life of more than 10 years. The battery is also available on our website: https://www.zeroerr.com/products/accessories/battery. Do not use other batteries other than ZeroErr proprietary multi-turn counting battery. We do not offer technical support for other batteries. Typically, each multi-turn eRob module is designed to operate with a single battery, which ensures both convenience and reliability during wiring. It is important to note that if an attempt is made to modify a single battery setup to supply power to multiple eRob modules simultaneously, ZeroErr cannot be held responsible for any potential consequences arising from this modification and the associated rewiring.

8. Adhere to Voltage and Current Limits:
Comply with technical data and specifications (nameplate and documentation). Exceeding the permissible voltage value or current value will damage the motor and cause abnormalities, such as overheating.

⚠	WARNING:

1. Pay Attention to the Rust-Prone Parts:
The material in the area indicated by the arrow in the image below is susceptible to rust. Therefore, when conducting installation operations, it is crucial to exercise caution and take necessary precautions. This includes wearing gloves to protect your hands and applying an anti-rust treatment to prevent corrosion and ensure the longevity of the material.

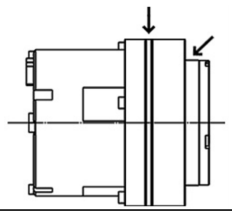

2. Do Not Exceed the Permissible Torque:
Please do not exceed the momentary permissible maximum torque when applying torque. Otherwise, it may result in loosening of fasteners, shaking, or damage, leading to product failure. When directly attaching to the output shaft, such as a robotic arm, colliding with the arm can cause damage and loss of control over the output shaft.

3. Do Not Disassemble Assembled Products:
This product is a high-precision device and must be installed and calibrated by professionals. It is strictly prohibited to disassemble or reassemble the assembled product. Reassembling the product may result in the loss of its original performance. Any product failures resulting from improper use will void the product warranty.

4. Do Not Modify the Module Assembly:
The product is a combination of various components, and its performance cannot be guaranteed when used in conjunction with other kits or components not intended for it. Any product malfunction resulting from improper use will result in the loss of warranty coverage. It is important to use the product as intended and avoid altering or mixing its components to ensure optimal performance and warranty protection.

5. Do Not Alter the Warranty Label:
Removing the tamper-proof warranty label on this product will result in the loss of warranty coverage for the product.

⚠	WARNING:

6. Use the Module in the Specified Environment:
① The product has an IP54 protection rating.
② Extreme operating temperature: -40~70°C (At extremely low temperatures, joint friction will increase significantly, resulting in higher operating currents. At high temperatures, over-temperature alarm protection and shut-off actions may be triggered.)
③ General Operating temperature: 0~60°C;
④ Storage temperature: -30~60°C; Using low-temperature lubricant will decrease the operational resistance of the module in low temperatures. For detailed model specifications, please refer to Section 2.1.
⑤ Operating and storage humidity: 20%~80%RH (non-condensing);
⑥ Avoid exposure to dust, metal particles, corrosive gases, flammable gases, oil mist, and similar substances.

7. Handle the Module with Care:
Avoid using hammers or forcefully striking any components or assemblies. Additionally, take precautions to prevent cracks or dents caused by accidental drops or impacts. Damaging the product in such a way can compromise its integrity, leading to performance issues and potential malfunctions. Handle the product with care to ensure its longevity and proper functionality.

8. Transportation:
Ensure that the personnel handling the transportation of the module do not bear excessive weight on their bodies, and maintain the original packaging during transportation. Use appropriate transportation equipment and adhere to all regional and national transportation guidelines. Our company is not responsible for any damages caused during transportation.

9. Operation Precaution:
The ZeroErr module is equipped with several outstanding features. However, incorrect operation or mishandling of its principles or structure can not only hinder its performance but also potentially result in malfunctions and damage. When using the module, it is vital to pay particular attention to the following:
① Avoid using the joint module in applications where there is a risk of dropping or falling. Even if there are no visible external damages, internal stress accumulation can weaken its fatigue strength. Therefore, it is advisable not to use the module if it has been dropped.

- Please Adhere to the Following Guidelines to Avoid Performance Issues:

⚠	WARNING:

The following actions may cause performance issues:
1. Failure to tighten the screws using the method specified in Section 19.3, or to follow the recommended tightening torque, minimum effective thread engagement and applicable conditions specified in Section 19.4.
2. Operating the product on a wooden table.
3. Running the joint module on a movable platform (such as an improperly secured base).
4. Installing the eRob module in a plastic or 3D-printed housing may affect heat dissipation, leading to overheating of the eRob module.

⚠	WARNING:

1. If abnormal vibration or noise occurs, first check mounting-surface cleanliness and flatness, support rigidity and screw fastening in accordance with Chapter 19. If the condition persists after the installation has been checked, follow Chapter 27 or contact technical support.
2. Mount the robot on a sufficiently solid surface without vibration (such as steel plates).
3. Even when opting for a rotary actuator model with EtherCAT communication, it is highly recommended to connect and preserve the joint CAN communication line within the entire system. It is also advisable to pre-configure the joint CAN ID (as outlined in Section 6.2) in order to facilitate subsequent debugging processes. This includes troubleshooting, parameter adjustments, firmware upgrades, and other tasks related to individual joints. Retaining the joint CAN communication line enables efficient and effective debugging procedures throughout the system's operation.

⚠	CAUTION:

1. Suspended and No-Load Operation:
eRob rotary actuator will also generate heat when running under no-load condition. Before the rotary actuator is mounted, its temperature will gradually increase due to insufficient heat dissipation, until the temperature protection is triggered. Please test with caution. Overheating is not an actuator fault under a suspended high-speed continuous operation. Install the rotary actuator normally, and additional cooling components are not required.

2. Oil churning noise reminder:
After the eRob rotary actuator rests horizontally in the axial direction for a period, there will be a slight oil churning noise due to the uneven distribution of grease sedimentation when running at a speed above 80% of the rated speed. The sound will disappear naturally when the distribution of grease gets even after the rotary actuator runs for about 5 minutes. The characteristics of the noise are:
(1) It appears when running at a high speed after keeping in a static state to cool down;
(2) The noise in the vertical state is lower than that of in the horizontal state;
(3) The noise at high temperature is lower than that of when the temperature is low;
(4) The noise at a low speed is lower than that of at a high speed;
(5) It will disappear naturally after running for about 5 minutes. This noise does not indicate an actuator fault.

- Maintenance:

⚠	WARNING:

1. Enhanced Protection for Specialized Industries:
The product has an overall ingress protection rating of IP54. Determine any additional protection required for the intended operating environment.

2. Grease Replacement in eRob Modules:
The lubricating grease within the eRob module does not require replacements, and the SWG does not allow for grease changes.

- Disposal Information:

⚠	WARNING:

1. Module Disposal must comply with industrial waste standards:
Please ensure that the product is disposed of as industrial waste and in compliance with relevant regulations and guidelines.

Table of Contents

SAFETY GUIDE **i**

Symbols and Abbreviations **xi**

1 Overview **1**
1.1 About This Manual . . . 1
1.2 Introductions of the eRob Series Modules . . . 1

2 eRob Specifications **3**
2.1 Understanding the eRob Model Code Definitions . . . 4
2.2 The Specifications of eRob Modules . . . 5
2.3 Mass, Center-of-Mass, and Inertia Parameters . . . 10

3 Power Input of eRob **11**
3.1 Power Supply Voltage and Rated Current Value . . . 11
3.2 Permissible Maximum Input Voltage . . . 11
3.3 Permissible Minimum Input Voltage . . . 13

4 Rotary Actuator Positive Rotation Direction **15**

5 Electrical Interface and Status Indicator LED **16**
5.1 Indicator LED Function . . . 16
5.2 CAN Communication Interface . . . 18
5.3 EtherCAT Communication Interface . . . 19
5.4 Multi-Turn Power Supply Battery Interface . . . 20
5.5 48V Power Supply Interface . . . 21
5.6 I/O Signal Terminal . . . 22
5.7 ESD Standard Specifications . . . 23
5.8 Cable Specification Explanation . . . 24
5.9 Force Instruction of Connector . . . 24
5.10 Force Instruction of Power Terminal . . . 25

6 Cable Wiring Among Rotary Actuators **26**
6.1 Power Supply Wiring Illustration . . . 26
6.1.1 Examples of Collaborative Robot Power Wiring . . . 29
3 kg Payload Collaborative Robot Arm Example(as shown in Figure 6-4): . . . 29
5 kg Payload Collaborative Robot Arm Example(as shown in Figure 6-5): . . . 30
10 kg Payload Collaborative Robot Arm Example(as shown in Figure 6-6): . . . 31
20 kg Payload Collaborative Robot Arm Example(as shown in Figure 6-7): . . . 32
6.2 CAN/CANopen Communication Wiring Diagram (as shown in Figure 6-8) . . . 33
6.3 EtherCAT Communication Wiring Diagram (as shown in Figure 6-9) . . . 34
6.4 Modbus-RTU Communication Wiring Diagram (as shown in Figure 6-10) . . . 35
6.5 I/O Signal Terminal Wiring Diagram . . . 36
6.6 Important Wiring Instructions . . . 38
6.6.1 Precautions for Wiring Through Module Central Hole . . . 38

6.6.2 Instructions for Cable and Battery Fixing Methods . . . 39
6.6.3 Module Housing Grounding . . . 40

7 Brake Instruction 41
7.1 Instruction and Caution . . . 41
7.2 Brake Lifespan . . . 42
7.2.1 Brake Opening and Closing Times . . . 42
7.2.2 The Amount of Forcible Drags While Brake Engaged . . . 42
7.3 Method for Forcibly Releasing the Brake (Non-Enabled State) . . . 42
7.3.1 eTuner Setup Support Software Operation . . . 42
7.3.2 EtherCAT Operation . . . 43
7.3.3 CANopen Operation . . . 45
7.4 Abnormal Brake Judgment . . . 45

8 Kinetic Energy Recovery 46
8.1 Analysis of the Cause of Kinetic Energy Recovery . . . 46
8.2 Solution . . . 46
8.2.1 Add Bleeder Resistor . . . 46
8.2.2 Add Super Capacitor . . . 47
8.2.3 Add Storage Battery . . . 47

9 Encoder and Position Feedback 48
9.1 Encoder Resolution and Single-Turn Position Feedback . . . 48
9.2 Position Feedback of Rotary Actuator . . . 48
9.3 Position and Cautions of Rotary Actuator with Single-Turn Function . . . 51
9.4 Position and Cautions of Rotary Actuator with Multi-Turn Function . . . 51
9.5 Instruction of Zero Position Calibration Function . . . 52
9.5.1 Zero Position Calibration Function of Single-Turn Rotary Actuator . . . 52
9.5.2 Zero Position Calibration Function of Multi-Turn Rotary Actuator . . . 54
9.6 Instruction of Position Protection Function . . . 55

10 Multi-Turn Power Supply Battery Instruction 57
10.1 Function of Battery . . . 57
10.2 Cautions on Battery Usage . . . 57
10.3 Multi-Turn Battery Current and Maintenance . . . 57
10.4 Battery Related Errors Handling . . . 59

11 Multi-Turn Encoder Battery Under-Voltage Warning 60
11.1 The Status when 48V Power Supply Switch from OFF to ON (0 -> 1) . . . 60
11.2 The Status When the 48V Power Supply Has Been Activated (1) . . . 61
11.3 Status During a 48V Power Cycle (ON–OFF–ON) . . . 61

12 Strain Wave Gear Analysis 62
12.1 Gear Ratio Analysis . . . 62
12.1.1 Output Rotational Speed Calculation . . . 62
12.1.2 About Speed Setting and Angular Velocity Conversion . . . 62

13 eTuner Setup Support Software Connection 65

14 eTunerII Setup Support Software (New Version) 67

14.1 Scope and Bundled Help . . . 67
14.2 Installation and Connection . . . 67
14.3 Editing and Saving Parameters . . . 67
14.4 Workbench Overview and Main Entries . . . 68
14.5 Common Tasks and Help Index . . . 69
14.6 Software Behaviors to Distinguish . . . 69

15 Trial Run for Rotary Actuator 70
15.1 eTunerII: Motion Debugging . . . 71

16 PID Tuning with Load 72
16.1 Speed Loop Adjustment . . . 72
16.2 Position Loop Adjustment . . . 73
16.3 EtherCAT Dynamically Modify PID Function . . . 75
16.4 eTunerII: PID and Oscilloscope Entries . . . 76

17 Special Function Introduction 77
17.1 PDO Dynamic Configuration . . . 77
17.2 PID Control Function of Variable Integral Upper Limit . . . 77

18 Permissible Forces in All Directions 78
18.1 Maximum Moment Load Calculation . . . 78
18.2 Cross Roller Bearing Lifespan Calculation . . . 80
18.2.1 Average Load Calculation . . . 80
18.2.2 Load Coefficient Calculation . . . 82
18.3 Static Safety Coefficient Calculation . . . 83
18.4 Ratcheting Torque . . . 83

19 eRob Installation Requirements 87
19.1 Locating Pilot Requirement of Flange Connection . . . 87
19.2 Recommended Mounting-Housing Bore Dimensions and Tolerances . . . 89
19.3 Screw Tightening Procedure . . . 90
19.4 Recommended Tightening Torque and Minimum Effective Thread Engagement . . . 90
19.5 Common Improper Installation . . . 93
19.6 Pre-Installation Cleaning Advisory . . . 96

20 Firmware Version Upgrade 97

21 Restoring Factory Parameter Function 98

22 Safe Torque Off (STO) 99
22.1 STO Function Configuration . . . 99
22.1.1 One STO Branch Circuit Function Configuration . . . 99
22.1.2 Two STO Branch Circuits Function Configuration . . . 100

23 Virtual Torque Sensor(VTS) 101

24 Life of Rotary Actuator 105

25 Pulse Direction Control 107

25.1 Parameter configuration of pulse direction control mode . . . 107
25.2 Pulse direction motion control . . . 108

26 Output Characteristic 111
26.1 eRob Motor Current, Output Torque, Rotational Speed Curve . . . 111
26.2 eRob Rotary Actuator Motor Parameter . . . 115
26.2.1 eRob Structural-Version Code Identification . . . 115
26.2.2 Motor Parameter . . . 115
26.3 eRob Motion Range . . . 119
26.4 eRob Bus Current, Output Torque, Rotational Speed Curves . . . 125

27 Troubleshooting Instruction 127
27.1 Abnormal CAN Communication . . . 128
27.1.1 “Check whether the drive is powered on” window pops up when clicking “connect” for test in eTuner . . . 128
27.1.2 The number of CANID identified by eTuner connection test is less than the actual CANID number of connection . . . 130
27.1.3 The data displayed on “Status Monitor” interface jumps abnormally when eTuner is connected. . . . 130
27.2 Abnormal EtherCAT Communication . . . 131
27.3 Motor Stalling Error . . . 133
27.4 The Velocity Error Exceeds the Limit Value (Error HEX:0x8400, DEC:33792) . . . 135
27.5 Position Feedback Value Misalignment After Power Cycle . . . 135
27.6 Abnormal RS485 (Modbus) Communication . . . 137

28 About Rigidity 139
28.1 Rigidity . . . 139
28.2 Torsional Quantity Calculation Example . . . 140
28.3 Hysteresis Loss . . . 141
28.4 Backlash . . . 141

29 Back-Driving by External Force 142

A Safety Precautions for Multi-Turn Encoder Battery 143

B Error Codes and Suggestions 144

C eRob Mass, Center-of-Mass, and Inertia Parameters 144
C.1 Parameter and Coordinate-System Definitions . . . 144
C.2 70 Series . . . 145
C.3 80 Series . . . 146
C.4 90 Series . . . 146
C.5 110 Series . . . 147
C.6 142 Series . . . 148
C.7 170 Series . . . 148

D eTunerII Operating Guide 149
D.1 Scope and Task Index . . . 149
D.2 Installation and Connection . . . 150
D.3 Parameter Editing, Saving and Common Entries . . . 151

D.4 Releasing and Engaging the Brake . . . 152
D.5 Position Feedback and Encoder Operations . . . 153
D.6 Trial Motion . . . 154
D.7 PID Tuning and Waveform Capture . . . 156
D.8 STO Configuration . . . 158
D.9 Pulse-Direction Control . . . 158
D.10 CAN ID and Connection Troubleshooting . . . 159
D.11 Self-Test and Fault Evidence . . . 160
D.12 Factory Restore and Parameter Files . . . 162

E Warranty **163**
E.1 Warranty Period and Scope . . . 163
E.2 Warranty Terms . . . 163

Declaration **164**

About Us **165**

Symbols and Abbreviations

α	angular acceleration/deceleration
η_t	the efficiency of SWG transmission
ω	output angular velocity
ω_θ	output angular velocity measured in °/s
ω_{rad}	output angular velocity measured in rad/s
ω_t	target speed (angular velocity)
θ	position angle
θ_{in}	angle of wave generator input shaft
θ_{out}	angle of flexspline output shaft
AAB	Armature Actuated Brake
$Acc.$	Acceleration
AKA	Also Known As
C	basic dynamic load rating
C_0	basic static load rating
CCW	Counterclockwise
D	diameter
DC	Direct Current
$D_{Circular\ Spline}$	the circular spline diameter
$Dec.$	Deceleration
$D_{Output\ Shaft}$	the output shaft diameter
d_p	pitch circle diameter
$ECAT$	EtherCAT
E_{FED}	error caused by flexspline elastic deformation
$e.g.$	for example
E_{in}	the transmission error of input shaft
E_{ITG}	error caused by input teeth gap
E_k	kinetic energy
E_M	error caused by manufacture
E_{out}	error caused by circular spline elastic deformation
$etc.$	and so forth
E_{WGD}	error caused by wave generator deformation
F	force
F_a	axial load
$F_{a,avg}$	average axial load
$F_{a,max}$	maximum axial load
F_r	radial load
$F_{r,avg}$	average radial load
$F_{r,max}$	maximum radial load
f_s	static safety coefficient
FS	factor of safety
f_w	load coefficient
GR	Gear ratio
I	electrical current
$I_{a,\ motor}$	the actual current input of motor
IP	Ingress Protection
ISO	International Organization for Standardization
K_e	voltage constant of torque motor AKA back EMF constant
K_m	Moment Stiffness
K_T	the torque constant
$K_{T,\ eRob}$	the eRob module torque constant

Continued on next page

Continued from previous page

$K_{T,\ motor}$	the motor torque constant
L_a	axial load length
L_h	life measured in hours
L_n	life of L_{10} or L_{50}
$L_{Output\ Shaft}$	the thickness of output shaft flange
L_r	radial load length
M_c	permissible moment load
M_{max}	maximum moment load
m_G	SWG gear ratio
N	the amount of revolutions
n	rotational speed
n_a	the actual maximum rotational speed output by the rotary actuator
n_{avg}	average SWG input / motor output rotational speed
N_{avg}	average output speed
N/A	Not Applicable
$NASA$	National Aeronautics and Space Administration
n_c	output rotational speed measured in counts/s
n_m	motor / SWG input rotational speed
n_o	SWG output rotational speed
N_{out}	the amount of eRob output rotation
n_r	the rated maximum output rotational speed
n_{RPM}	output rotational speed measured in RPM
n_t	motor rated rotational speed used for module rated torque testing (2000RPM)
OD	Outer Diameter
P_0	static equivalent load
P_c	current encoder position
P_C	dynamic equivalent load
$P_{encoder}$	encoder position
p_{input}	the amount of external input pulses
P_s	single-turn encoder position
R	offset length
RPM	Revolutions Per Minute
SI	International System of Units
SWG	Strain Wave Gear
t	time
T	torque
t_a	acceleration/deceleration time
T_a	the actual torque output by the rotary actuator module
T_{avg}	average load torque on the SWG output side
T_{out}	the eRob output torque
T_r	the rated torque output by the eRob module
V_{DC}	DC voltage
V_{in}	the actual voltage supplied to the rotary actuator module
V_r	the rated input voltage of the eRob module
X	radial load coefficient
Y	axial load coefficient

Chapter 1 Overview

1.1 About This Manual

This manual contains comprehensive information regarding the operation parameters, safety range, application methods, safety precautions, and other relevant details of the eRob series rotary actuator developed, designed, and manufactured by ZeroErr. We strongly advise reading the manual carefully before engaging in any operation.

1.2 Introductions of the eRob Series Modules

Each eRob series rotary actuator incorporates ZeroErr's proprietary servo driver and absolute encoder technologies. These technologies have been meticulously refined through extensive customer service experience, ensuring unparalleled performance and reliability.
The primary objective of the eRob series is to streamline and accelerate the robot development process while prioritizing safety. By offering a pre-integrated and pre-tested rotary actuator unit, ZeroErr significantly simplifies the integration process for robot developers. This approach reduces development time and associated costs typically incurred with custom design and integration.

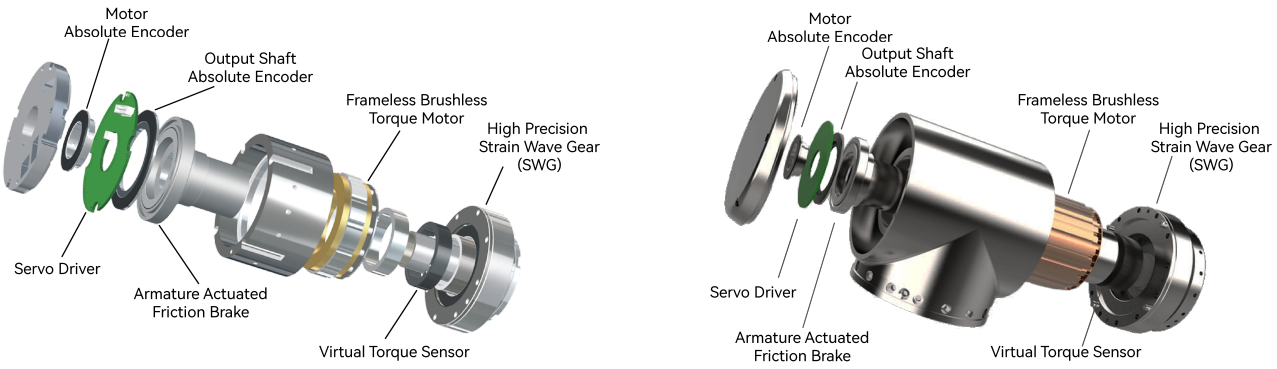

(a) I-Type eRob Module (b) T-Type eRob Module

Figure 1-1 Exploded View of eRob Rotary Actuator Modules

The eRob series rotary actuator offers a diverse range of meticulously crafted units, including the I-type eRob and T-type eRob. Each model is engineered to deliver precise performance and features a compact form factor, ensuring versatility across different applications.

Designed as an all-in-one solution, each eRob rotary actuator unit incorporates essential components within its small form factor. These components include a servo driver with an integrated temperature sensor, absolute encoder for the motor, multi-turn absolute encoder for output, frameless brushless torque motor, armature-actuated friction brake (AAB), high-precision strain wave gear reducers (SWG), as shown in Figure 1-1.
The eRob series rotary actuators eliminate the need for time and effort investment in selecting, designing, purchasing, and assembling multiple mechanical and electronic devices from scratch. This simplifies the development process and accelerates time to market for robotic applications.

Chapter 2 eRob Specifications

Figure 2-1 illustrates the prefix, eleven configuration positions and suffix using `eRob70F100I-BM-18ENLDC[V4]` as an example. The position boxes and spacing are visual aids only and are not part of the model. The model contains two hyphens: one between positions 4 and 5 and one between positions 6 and 7. The individual positions are explained in Section 2.1.

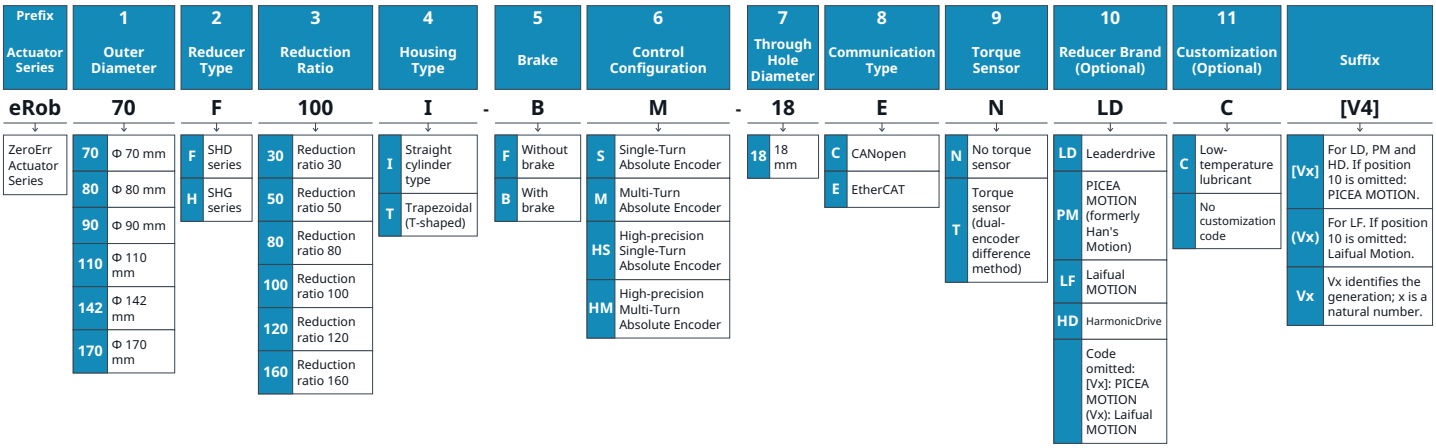

eRob70F100I-BM-18ENLDC[V4]

Figure 2-1 The Model Code of eRob Series Rotary Actuator Modules

2.1 Understanding the eRob Model Code Definitions

Table 2-1 eRob Model Position Definitions

Position	Name	Values and meaning
Prefix	Product Series	eRob: the fixed prefix for ZeroErr robot-joint products.
1	Outer Diameter	70/80/90/110/142/170: the maximum outside diameter of an I-type joint, in millimeters. The measured maximum diameter of a T-type joint is larger than this value; use the applicable drawing for the actual dimension.
2	Gear Reducer Type	F: SHD-series gear reducer, with shorter axial length and lower weight; H: SHG-series gear reducer, with greater torque and load capacity.
3	Gear Ratio	30/50/80/100/120/160. The gear ratio is determined by the tooth counts of the flexspline and circular spline. When the output turns once, the motor side turns the gear ratio plus one revolution. Only a subset is available for each gear-reducer size.
4	Housing Type	I: straight cylindrical housing; T: trapezoidal housing shaped like the letter T. Other parameters are the same; use the applicable drawing for actual dimensions.
5	Brake	B (Brake): with a holding brake; F (Free Motion): without a holding brake. The holding brake is intended for static holding; see Chapter 7 for dynamic-braking limits and emergency-stop precautions.
6	Control Section	S: Single-Turn Absolute Encoder; M: Multi-Turn Absolute Encoder using a battery-buffered revolution counter; HS/HM: corresponding high-precision single-turn/multi-turn configurations.
7	Through-Bore Diameter	18: diameter of the joint through-bore, in millimeters.
8	Communication Type	E: EtherCAT; C: CANopen. Both communication types also support Modbus through the RS485 interface.
9	Torque Sensor	N: without a torque sensor; T: torque sensor based on dual-encoder difference measurement. See Chapter 23.

Table 2-1 continued

Position	Name	Values and meaning
10	Gear Reducer Brand	LD: Leaderdrive; PM: PICEA MOTION (formerly Han's Motion); LF: Laifual MOTION; HD: HarmonicDrive. LD and HD must be stated explicitly. PM and LF may be omitted; in that case, the brand is identified by the suffix (see the Suffix row).
11	Customization	Blank: no customization code; C: low-temperature lubricant. See the eRob High and Low Temperature Reliability Test Report.
Suffix	Reducer Brand and Generation	[Vx]: used with LD, PM and HD; when position 10 is omitted, square brackets indicate PICEA MOTION. (Vx): used with LF; when position 10 is omitted, parentheses indicate Laifual Motion. Vx identifies the generation, where x is a natural number.

Table 2-2 Supported Configuration Combinations

Control Section	Torque Sensor	Configuration
HS/HM	T	High-precision configuration with torque sensor.
S/M	N	Standard-precision configuration without torque sensor.

Rotary actuator modules use a 17-bit motor-side absolute encoder and a 19-bit output-side absolute encoder for full closed-loop control. Repeatability/absolute accuracy is ±7/±15 arcsec for HS/HM and ±10/±25 arcsec for S/M. See zeroerr.com/accuracy for the detailed accuracy statement. Specification tables in this manual are organized by series and configuration. Provide the complete model when ordering, requesting drawings or contacting technical support. For a delivered product, also provide the serial number on the nameplate.

2.2 The Specifications of eRob Modules

Software applicability: In eTunerII, use Device parameters → Encoder → load end to view the read-only Use multi-turn absolute position configuration; see Section D.3.

The Specifications of eRob Series Rotary Actuator Modules are shown in Table 2-3.

Using the Specification Tables

Select parameters for the applicable product series, gear ratio, configuration, generation and structural-version code identified in the table. Use the product-specific 2D installation drawing for dimensions and mounting interfaces. Select mass and inertia data separately for configurations with and without a holding brake. Select accuracy data for the installed encoder configuration.

Table 2-3 The Specifications of eRob Series Rotary Actuator Modules: eRob70F

Parameter	50	80	100
Series / structural version	eRob70F (V3)		
SWG size and gear ratio	14-50 Ultra-Flat	14-80 Ultra-Flat	14-100 Ultra-Flat
Peak start/stop torque (N·m)	12	16	19
Permissible maximum average load torque (N·m)	4.8	7.7	7.7
Rated torque (N·m)	3.7	5.4	5.4
Permissible maximum momentary torque (N·m)	23	35	35
Maximum output speed (RPM)	60	37.5	30

Table 2-3 eRob70F Specifications (continued)

Parameter	Without Brake	With Brake
SWG output-side mass (kg)	0.13	0.13
SWG output-side inertia (g·mm^2)	54030	54030
SWG input-side inertia (g·mm^2)	43656	46885
SWG input-side mass (kg)	0.15	0.16
Outer diameter × length (mm)	70 × 60.4	70 × 67.7
Total mass (kg)	0.77	0.83

Common parameters: supply 48 V (±10%), motor power 75 W, hollow-bore diameter 18 mm, IP54, and 19-bit output-side encoder resolution. S/M repeatability / absolute accuracy: ±10 / ±25 arcsec. Brake type: armature-actuated friction brake. EtherCAT or CANopen; both support Modbus-RTU via RS485.

Table 2-3 eRob70F Specifications (continued)

Parameter	eRob70F (V4)	
Structural version	V4 (MC2B.EX.XX)	
Control configuration	HS/HM with torque sensing	
Communication	CANopen / EtherCAT	
Gear ratio	50	100
Peak start/stop torque (N·m)	12	19
Permissible maximum average load torque (N·m)	4.8	7.7
Rated torque (N·m)	3.7	5.4
Permissible maximum momentary torque (N·m)	23	35
Maximum output speed (r/min)	60	30
Test conditions	Rated torque is specified at an input speed of 2000 r/min. Maximum output speed is specified at 48 V and rated torque.	
Brake configuration	**Without Brake**	**With Brake**
Outer diameter × body length (mm)	70×51	70×60
Overall length including connector projection (mm)	54.4	63.4
Total mass (kg)	0.63	0.74
SWG output-side mass (kg)	0.12	0.12
SWG output-side inertia (g·mm^2)	53145	53145
SWG input-side mass (kg)	0.09	0.11
SWG input-side inertia / rotor inertia (g·mm^2)	23508	26896
Common parameters	supply 48 V (±10%), motor power 75 W, through-bore diameter 18 mm, IP54, and 19-bit output-side encoder resolution. HS/HM repeatability / absolute accuracy: ±7 / ±15 arcsec. For whole-module COM coordinates and inertia tensors, see Appendix C.	

Table 2-3 The Specifications of eRob Series Rotary Actuator Modules Part 1 (continued)

Series Code	SWG Size & Gear Ratio	Peak Start Stop Torque	Permissible Maximum Torque with Average Load	Rated Torque	Permissible Maximum Momentary Torque	Maximum Output Rotational Speed	Torque Motor Rated Power	Input Voltage	SWG Output Side Inertia	SWG Output Side Mass
		Nm				RPM	W	V	$g \cdot mm^2$	kg
eRob70H	14-50	23	9	7	46	60	100	48V ± 10%	69717	0.17
	14-80	30	14	10	61	37.5				
	14-100	36	14	10	70	30				
	14-120	36	14	10	70	25				
eRob80H	17-50	44	34	21	91	60	146		150085	0.25
	17-80	56	35	29	113	37.5				
	17-100	70	51	31	143	30				
	17-120	70	51	31	112	25				
eRob80F	17-50	23	18	11	48	60	126		107809	0.172
	17-100	37	27	16	71	30				
eRob90H	20-50	73	44	33	127	60	300		297466	0.36
	20-80	96	61	44	165	37.5				
	20-100	107	64	52	191	30				
	20-120	113	64	52	191	25				
eRob110H V4	25-50	127	72	51	242	60	750		715482	0.58
	25-80	178	113	82	332	37.5				
	25-100	204	140	87	369	30				
	25-120	217	140	87	395	25				
	25-160	229	140	87	408	18.75				
eRob110H V6	25-50	127	72	51	242	60	723		717286	0.56
	25-80	178	113	82	332	37.5				
	25-100	204	140	87	369	30				
	25-120	217	140	87	395	25				
	25-160	229	140	87	408	18.75				
eRob110H HD[V6]	25-120	217	140	87	395	25	723		717286	0.56
eRob142H	32-50	281	140	99	497	40	1000		2589596	1.21
	32-80	395	217	153	738	25				
	32-100	433	281	178	841	20				
	32-120	459	281	178	892	16.7				
	32-160	484	281	178	892	12.5				
eRob170H	40-50	402	196	137	686	40	1000		6679752	2.02
	40-80	519	284	206	980	25				
	40-100	568	372	265	1080	20				
	40-120	617	451	294	1180	16.7				
	40-160	647	451	294	1180	12.5				
Universal Specification		Hollow Bore Diameter: 18mm; IP-Rating: IP54; Brake Type: Armature Actuated								
Optional Configuration		Communication: EtherCAT or CANopen; both support Modbus-RTU via RS485. Output-Side Encoder Resolution: 19 Bit (all configurations); S/M Repeatability/Accuracy: ±10/±25 arcsec*; HS/HM Repeatability/Accuracy: ±7/±15 arcsec (eRob90H/110H/142H/170H); HD control: HS/HM with torque sensor T. Optional Low-Temperature Lubricant.								

* 1 arcsec = 1/3600 degree = 4.848 μrad

Table 2-4 The Specifications of eRob Series Rotary Actuator Modules Part 2

Series Data		Without Brake				With Brake			
Series / configuration	SWG output side mass (kg)	SWG input side inertia ($g \cdot mm^2$)	SWG input side mass (kg)	OD × length (mm)	Total mass (kg)	SWG input side inertia ($g \cdot mm^2$)	SWG input side mass (kg)	OD × length (mm)	Total mass (kg)
eRob70H	0.17	47767	0.18	70 × 75.3	0.87	50996	0.19	70 × 75.3	0.93
eRob80H	0.25	67408	0.26	80 × 84.2	1.19	70637	0.27	80 × 84.2	1.25
eRob80F	0.172	29818	0.129	80 × 57.5	0.89	31399	0.142	80 × 57.5	0.95
eRob90H	0.36	139057	0.41	90 × 98.9	1.75	147025	0.43	90 × 98.9	1.87
eRob110H V4	0.58	277434	0.7	110 × 115.2	2.88	285402	0.72	110 × 115.2	3.06
eRob110H V6 eRob110H HD[V6]	0.56	308632	0.53	110 × 80.2	2.57	316600	0.55	110 × 80.2	2.68
eRob142H	1.21	1244894	1.33	142 × 133.9	6.49	1273287	1.37	142 × 133.9	6.7
eRob170H	2.02	1517148	1.66	170 × 144.9	9.29	1545541	1.7	170 × 144.9	9.5

Brake type: friction brake.

2.2.1 Output-Side (Load) Specifications

(1) ***Permissible Peak Start Stop Torque (as shown in Figure 2-2):***
During startup and stopping, due to the rotational inertia of the load, there may be a load acting on the actuator module that exceeds the normal torque. The values in the eRob specification table represent the permissible value of the peak torque in such situations.

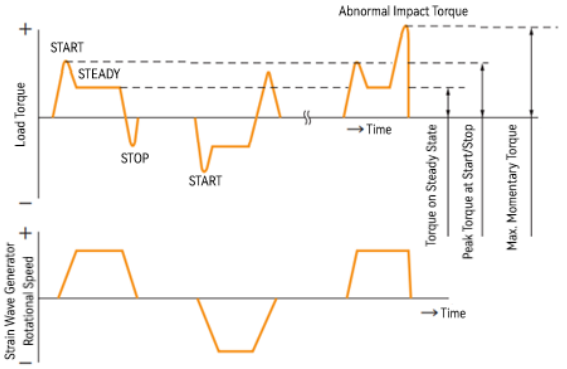

Figure 2-2 Example of Load Pattern

(2) ***Permissible Maximum Torque with Average Load:***
When there are variations in the load torque and input rotational speed, it is necessary to calculate the average value of the load torque. The values in the eRob specification table represent the permissible value at the average load torque. If the average load torque exceeds the values specified in the eRob specification table, it can lead to premature degradation of lubricants and abnormal gear wear due to heat generation. Please pay close attention to this.

(3) ***Rated Torque:***
This information specifies the maximum continuous load torque that is allowed when the input motor rotational speed is 2000RPM.

(4) ***Permissible Maximum Momentary Torque (as shown in Figure 2-2):***
Apart from the usual load torque and the load torque during startup and stopping, there may be unforeseen external impact torques. It is important to note that the maximum value of the impact torque must not exceed the Permissible Maximum Momentary Torque specified in the eRob specification table. This is crucial to ensure the proper functioning and longevity of the eRob module. Exceeding the permissible limits can result in mechanical stress, potential damage to the module, and compromised performance. Therefore, it is essential to carefully consider and account for these factors to maintain optimal operation and prevent any undesirable consequences.

(5) ***Maximum Output Rotational Speed:***
The Maximum Output Rotational Speed is the maximum speed the SWG can output on the load bearing end, the motor rotational speed at this moment is at its rated rotational speed, as shown in Section 26.2.2. The relation between the output torque and the output rotational speed is shown in Section 26.3.

2.2.2 Input-Side (Motor) Specifications

(1) ***Torque Motor Rated Power:***
The torque-motor power is an input-side (motor) parameter. For the motor parameters, refer to Table 26-1.

(2) ***Input-Side SWG Inertia***

(3) ***Input-Side SWG Mass***

For 2D drawings, 3D models and further product information, visit the ZeroErr website. www.zeroerr.com.

2.2.3 Difference Between Single-Turn and Multi-Turn Absolute Encoders

(1) ***Multi-Turn Absolute Encoder***
The multi-turn configuration uses a battery-buffered revolution counter and retains the multi-turn position value while the main power is disconnected. Install the supplied battery before using this function.

(2) ***Single-Turn Absolute Encoder***
The single-turn configuration provides the position value within one revolution and does not retain the number of revolutions after a power cycle.

To identify the configured encoder type, check whether “Multi-Turn” is selected in the Encoder interface of the eTuner Setup Support Software. The single-turn and multi-turn configurations differ in both hardware and software.

2.2.4 Communication Protocol Supported

(1) A CANopen configuration with communication-type position `C` supports:
- CANopen
- CAN-custom
- Modbus (RTU/ASCII)

(2) An EtherCAT configuration with communication-type position `E` supports:
- EtherCAT
- CAN-custom
- Modbus (RTU/ASCII)

CAN-custom and Modbus-ASCII are proprietary communication protocols developed by our company. The communication protocol used between the rotary actuator and the eTuner Setup Support Software is CAN-custom (see the YouTube tutorial for the connection method). EtherCAT and CANopen follow the CiA 402 control profile but use different communication physical-layer interfaces.

2.3 Mass, Center-of-Mass, and Inertia Parameters

This section describes the mass, center-of-mass coordinates, and inertia-tensor parameters for each eRob series rotary actuator module. These parameters are primarily used for whole-robot dynamic modeling, load-capacity verification, motion simulation, and control-system parameter design. Select the applicable data set according to the series code, structural-version code, and holding-brake state. For the coordinate-system and inertia definitions and the complete parameter set for each series code, refer to Appendix C, “eRob Mass, Center-of-Mass, and Inertia Parameters.”

Chapter 3 Power Input of eRob

Software applicability: The eTuner power-setting procedures and images below apply to eTuner. For eTunerII, see Section D.3. The supply conditions and voltage examples retain their stated applicability; check V versus mV before entering values.

3.1 Power Supply Voltage and Rated Current Value

When the actuator is powered by a **48V DC** supply (the factory default settings), the permissible bus voltage range is as follows:

- **Minimum bus voltage:** 44V
- **Maximum bus voltage:** 55V

If the detected voltage exceeds **55V**, the drive will trigger an **over-voltage error**. Conversely, if the detected voltage drops below **44V**, an **under-voltage error** will be triggered. The rated current of a rotary actuator is shown in Table 3-1.

Table 3-1 Rated Current of Each Rotary Actuator Model

Model	Voltage (V)	Current (A)
eRob70F	48±10%	1.9
eRob70H	48±10%	2.55
eRob80F	48±10%	3.5
eRob80H	48±10%	4.1
eRob90H	48±10%	6.7
eRob110H	48±10%	18.6
eRob142H	48±10%	26
eRob170H	48±10%	45

3.2 Permissible Maximum Input Voltage

The permissible maximum voltage of the eRob power interface is **60V DC**. If the input voltage exceeds **60V**, it may lead to drive failure. The input voltage waveform when the eRob is supplied power abnormally is shown in Figure 3-2a.

Note: When powering on the eRob with a switching power supply or battery (by connecting the power output side to a circuit breaker and then to the eRob power interface), there may be an **over-voltage shock** (>60V) when turning on the switch. To prevent this, a capacitor (reference specification: **1000uF, 100V**) should be connected in parallel behind the circuit breaker before powering on the rotary actuator. This will help avoid the overshoot of input voltage at the moment of powering on.

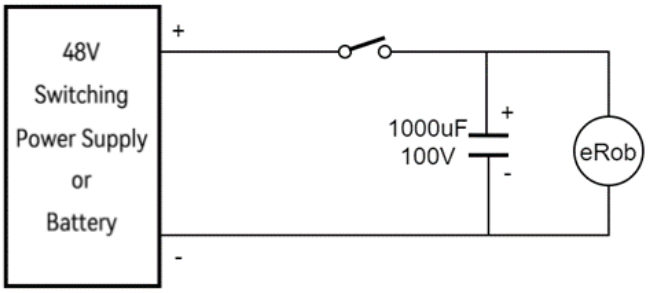

Figure 3-1 Wiring Diagram of Electrolytic Capacitor in Parallel with Power Supply

The wiring configuration is shown in Figure 3-1. The input voltage waveform when the eRob is supplied power normally after connecting a capacitor is shown in Figure 3-2b.



(a) Abnormal Power Input Voltage Waveform
(V_{max} = 130V > 60V)

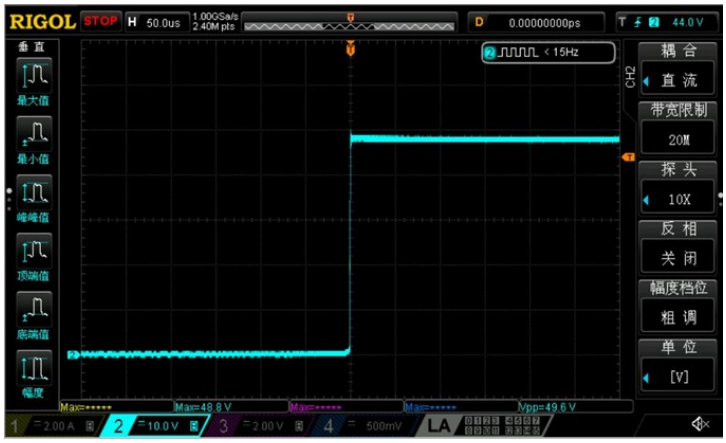

(b) Normal Power Input Voltage Waveform
(V_{max} = 48.8V < 60V)

Figure 3-2 Power Input Related Diagrams

When powering on with a battery (e.g., lithium battery or other storage battery), the back electromotive force (back EMF) has no influence on the eRob system. This is because the back EMF generated during the regenerative braking process directly charges the battery. Therefore, no specific actions are required for back EMF. However, it is necessary to modify the permissible maximum and minimum voltage settings in the "*Safe Power*" section of eTuner.

When the battery voltage exceeds **48V** (e.g., when using a 52V DC battery), the permissible bus voltage must be adjusted:

(1) Set the permissible **maximum bus voltage** to **57.2V** (calculated as 52V × 110%). The percentage can be modified based on actual requirements;
   - **NOTE**: It is not recommended to set the maximum bus voltage above **60V**.

(2) Set the permissible **minimum bus voltage** to **46.8V** (calculated as 52V × 90%). Similarly, the percentage can be adjusted as needed.

After making these adjustments, apply and save the parameters. The configuration process is illustrated in Figure 3-3a.

Error Debugging: If the detected voltage exceeds the permissible maximum bus voltage of **57.2V**, the eRob system will not be enabled. Instead, an error report will be generated, stating: "*The bus voltage is overvoltage*", and the system will shut down. For example, in Figure 3-3b, the detected voltage is **58.558V**, which triggers the error.

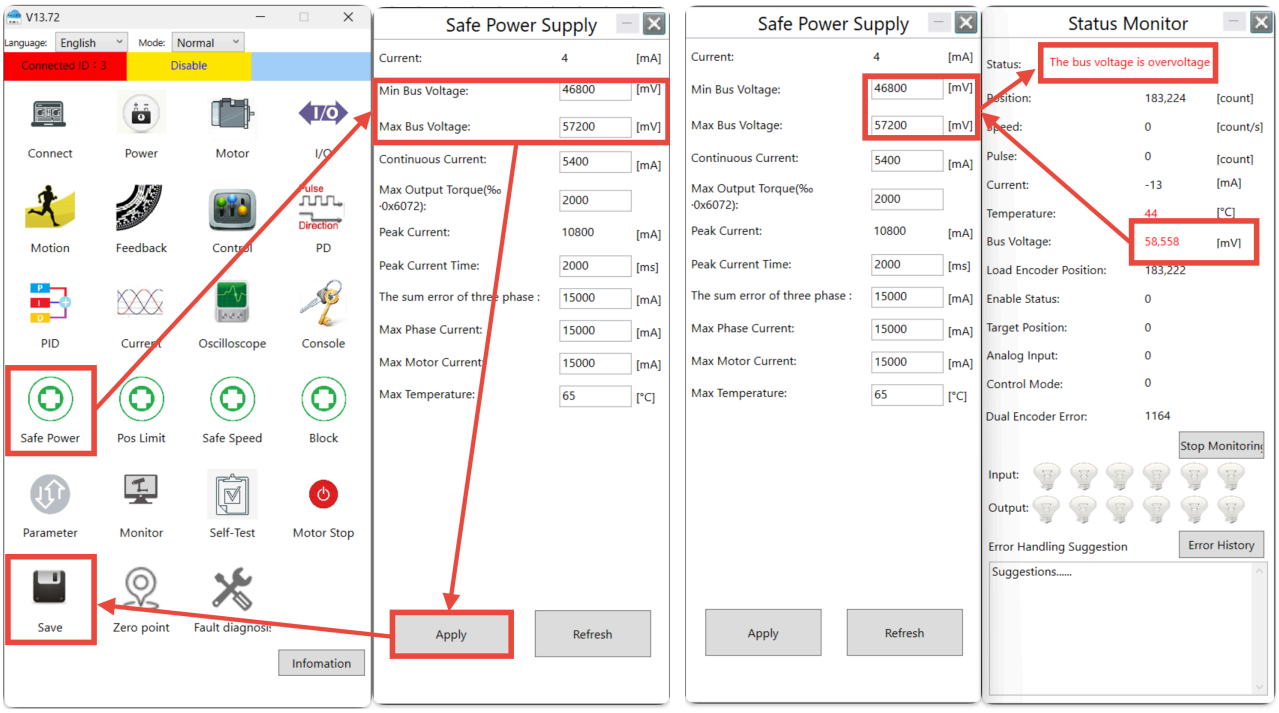

(a) Example of Using DC52V Power Supply (b) "The bus voltage is overvoltage" Error Message

Figure 3-3 eTuner Over-Voltage Error Example

3.3 Permissible Minimum Input Voltage

The permissible minimum input voltage of eRob rotary actuator with brakes is shown in Table 3-2.
The permissible minimum input voltage of the eRob without brakes is **19.5V**.
When the input voltage is lower than the permissible minimum input voltage, the eRob will fail to operate normally.
The correlation between the actual maximum rotational speed of the eRob and the input voltage is shown below:

Table 3-2 The Permissible Input Voltage of Rotary Actuators with Brakes

Model	Voltage (V)
eRob70F	24
eRob70H	24
eRob80F	24
eRob80H	24
eRob90H	48
eRob110H	48
eRob142H	48
eRob170H	48

$$n_a = n_r \times \frac{V_{in}}{48V} \tag{3.1}$$

Symbol	Definition	Unit
n_a	The actual maximum rotational speed output by the rotary actuator.	RPM
n_r	The rated maximum output rotational speed, as shown in Table 2-3.	RPM*
V_{in}	The actual voltage supplied to the rotary actuator module.	V

* To convert the rotational speed to angular velocity, please refer to Chapter 12.1.

When the input voltage is lower than the rated voltage, the actual maximum rotational speed will be reduced. However, the torque performance will remain unaffected.

$$V_{in} \leq V_r \quad \Rightarrow \quad \begin{cases} n_a \leq n_r \\ T_a = T_r \end{cases}$$

Symbol	Definition	Unit
V_{in}	The actual voltage supplied to the rotary actuator module.	V
V_r	The rated input voltage of the eRob module, as shown in Table 2-3.	V
n_a	The actual maximum rotational speed output by the rotary actuator.	RPM
n_r	The rated maximum output rotational speed, as shown in Table 2-3.	RPM
T_a	The actual torque output by the rotary actuator module.	Nm
T_r	The rated torque output by the rotary actuator module, as shown in Table 2-3.	Nm

Since the factory default permissible minimum bus voltage is **44V**, using a voltage below **44V** requires manually modifying the permissible minimum bus voltage. This can be configured in the "*Safe Power*" interface of eTuner.

Example: When powering the system with **24V DC**, the permissible bus voltage settings should be adjusted as follows:

- Modify the permissible **minimum bus voltage** to **21.6V** (calculated as $24V \times 90\%$; the percentage can be adjusted according to the actual situation).
- Modify the permissible **maximum bus voltage** to **26.4V** (calculated as $24V \times 110\%$; the percentage can be adjusted according to the actual situation).

After making these adjustments, apply and save the parameters. The configuration process is illustrated in Figure 3-4a.

Error Handling: If the detected voltage falls below the permissible minimum bus voltage of **21.6V**, the eRob rotary actuator cannot be enabled. An error report will be generated stating: "*The bus voltage is undervoltage.*" The system will then shut down. For instance, in Figure 3-4b, the detected voltage is **20.588V**, triggering this error.

Note: The eRob rotary actuator does not incorporate the eDriver regenerative-braking circuit. Therefore, eDriver parameters associated with that circuit do not apply to the eRob.

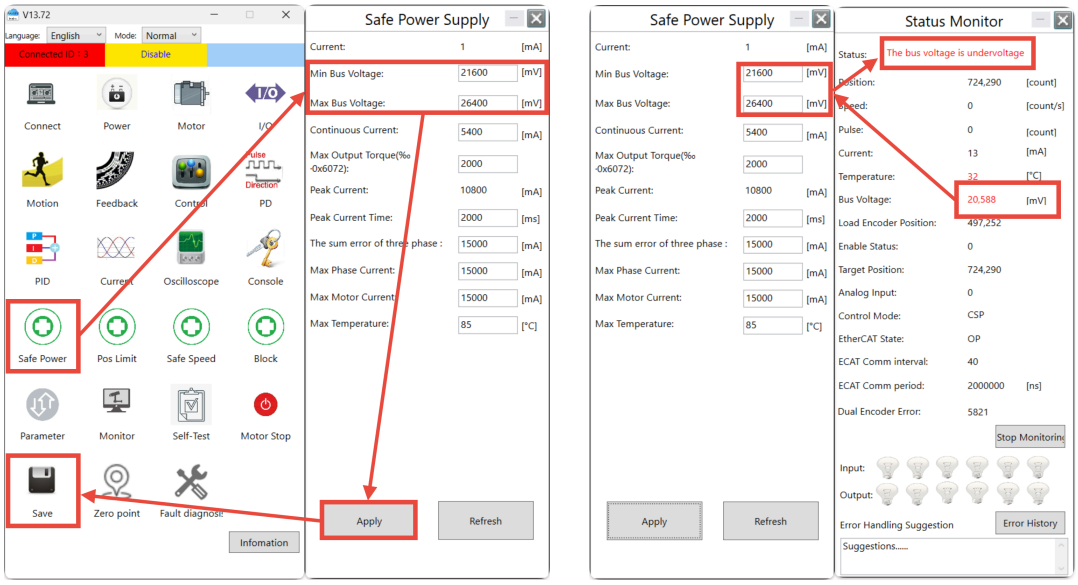

(a) Example of Using DC24V Power Supply (b) "The bus voltage is undervoltage" Error Example

Figure 3-4 eTuner undervoltage example

Chapter 4 Rotary Actuator Positive Rotation Direction

Facing the output shaft of the strain wave gear (SWG), the **positive rotation direction** of the eRob rotary actuator is as shown in Figure 4-1. The positive rotation direction is the **counter-clockwise (CCW)** rotation direction.

Note: The positive rotation direction of the eRob rotary actuator **cannot be modified**. However, the eRob's rotation direction is determined by the direction of the target command, which can be adjusted by the controller.

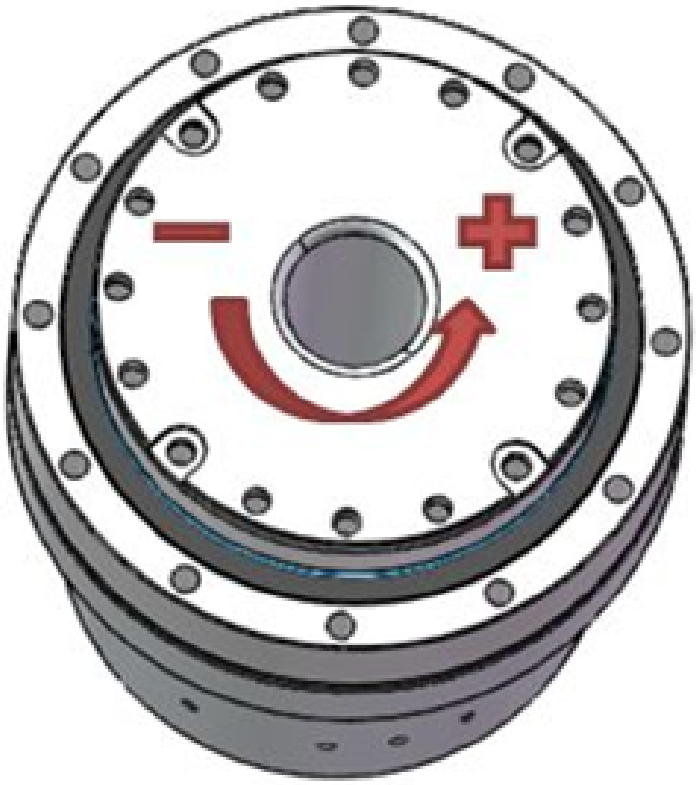

Figure 4-1 Positive Rotation Direction of Rotary Actuator

Chapter 5 Electrical Interface and Status Indicator LED

5.1 Indicator LED Function

(1) **Run LED**

System Operation Indication.

LED Status	Green light flashes.
LED Status Figure	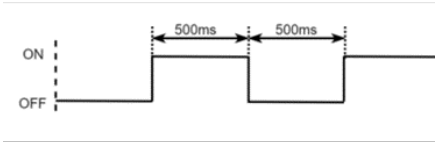

(2) **Power LED**

24V power status indication. This LED does not indicate the bus input voltage level; refer to Chapter 3 and Section 6.1 for the input-voltage range.

LED Status	Green light is always on.
LED Status Figure	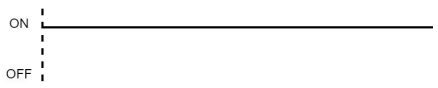

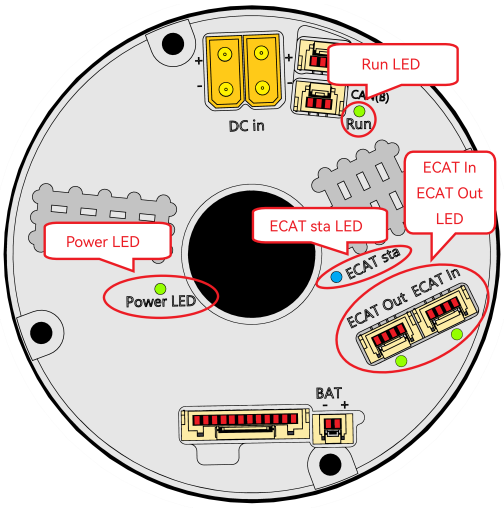

Figure 5-1 eRob Module LED Illustration

(3) **ECAT In LED**

EtherCAT In is used to connect the ECAT Out port of previous eRob slave or master controller.

ECAT Communication Connection Status	LED Status	LED Status Figure
Communication cable is not connected and the EtherCAT (COE) controller does not start.	Light is off	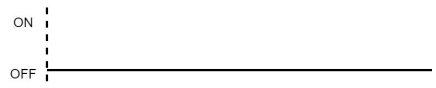
Communication cable is connected, but data communication is not performed.	Green light is always on.	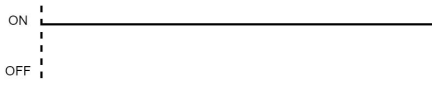
Data communication is in progress.	Green light flashes quickly.	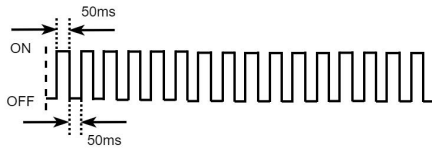

(4) **ECAT Out LED**

EtherCAT Out is used to connect the ECAT In port of slave of the next eRob.

ECAT Communication Connection Status	LED Status	LED Status Figure
Communication cable is not connected and the EtherCAT (COE) controller does not start.	Light is off	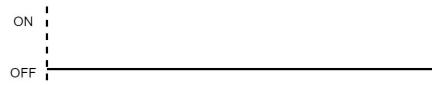
Communication cable is connected, but data communication is not performed.	Green light is always on.	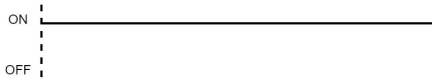
Data communication is in progress.	Green light flashes quickly.	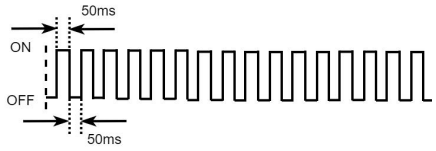

(5) **ECAT sta LED**

Indicates the state of the EtherCAT state machine.

ECAT Communication Connection Status	LED Status	LED Status Figure
INIT status	Light is off	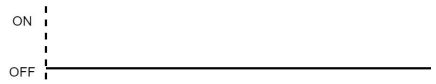
PREOP status	Blue light flashes	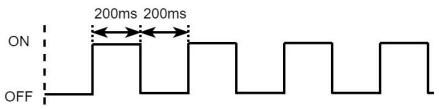
SAFEOP status	Blue light flashes once, and $Time_{off}$ >$Time_{on}$	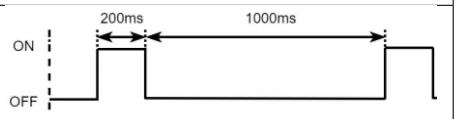
OP status	Blue light is always on	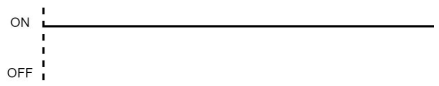
BOOT status	Blue light flashes quickly.	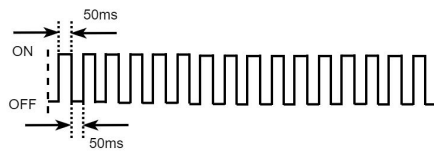

Note: Please refer to *Section 4.3* in *eRob CANopen and EtherCAT User Manual* for the details about the EtherCAT state machine.

5.2 CAN Communication Interface

Pin	Terminal Label	Terminal Function
1	CAN_H	CAN Network Signal
2	CAN_L	
3	CAN_GND	CAN Network Ground

Pin Layout	Connector
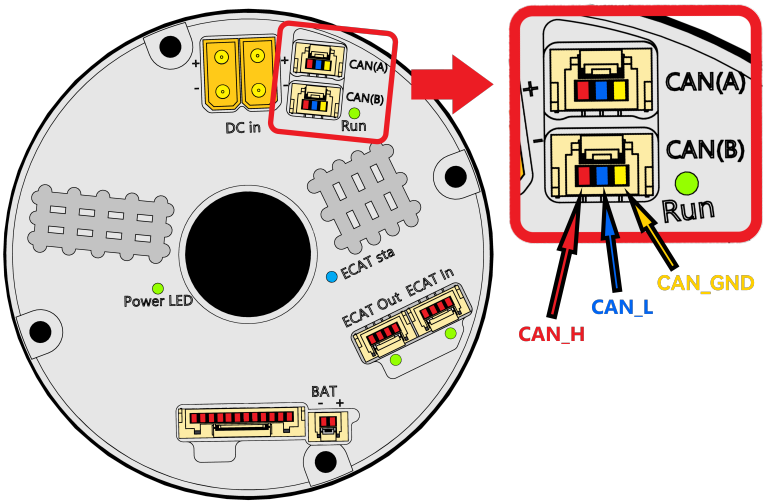	
Header Information	**Connector Information**
Model: BM03B-GHS-TBT	Manufacturer: JST Housing Model: GHR-03V-S Contact Model: SSHL-002T-P0.2
Specification: JST Top Entry Single Row 3Pin 1.25mm Pitch Disconnectable Crimp Style Connector	

5.3 EtherCAT Communication Interface

	ECAT In		ECAT Out	
Pin	Terminal Label	Terminal Function	Terminal Label	Terminal Function
1	ECAT In_RX-	EtherCAT Input Signal Reception-	ECAT Out_RX-	EtherCAT Output Signal Reception-
2	ECAT In_RX+	EtherCAT Input Signal Reception+	ECAT Out_RX+	EtherCAT Output Signal Reception+
3	ECAT In_TX-	EtherCAT Input Signal Transmission-	ECAT Out_TX-	EtherCAT Output Signal Transmission-
4	ECAT In_TX+	EtherCAT Input Signal Transmission+	ECAT Out_TX+	EtherCAT Output Signal Transmission+
Pin Layout			Connector	
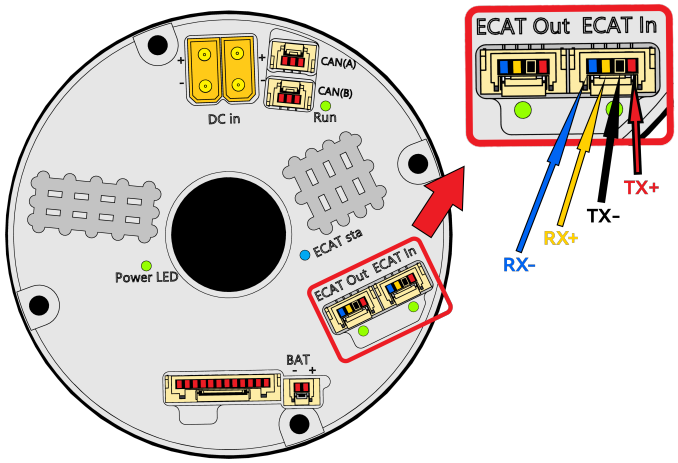				
Header Information			Connector Information	
Model: BM04B-GHS-TBT			Manufacturer: JST Housing Model: GHR-04V-S Contact Model: SSHL-002T-P0.2	
Specification: JST Single Row 4Pin 1.25mm Pitch Disconnectable Crimp Style Connector				

Note: CANopen configurations with communication-type position C do not have this interface.

5.4 Multi-Turn Power Supply Battery Interface

Pin	Terminal Label	Terminal Function
1	VB+	Battery Positive
2	VB-	Battery Negative

Pin Layout	Connector
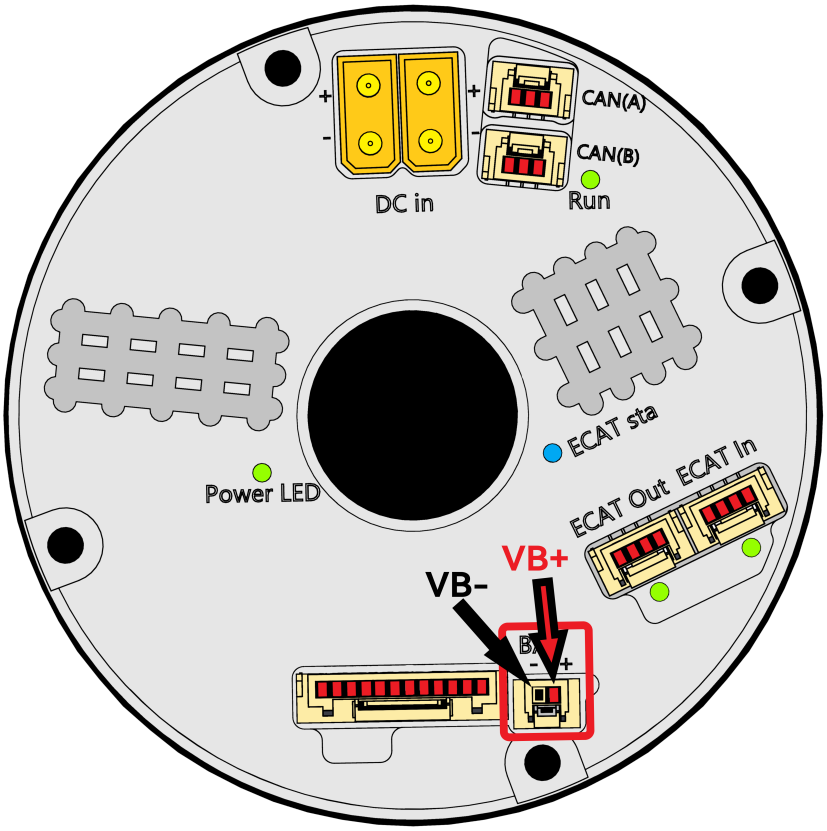	

Header Information	Connector Information
Model: BM02B-GHS-TBT	Manufacturer: JST Housing Model: GHR-02V-S Contact Model: SSHL-002T-P0.2
Specification: JST Single Row 2Pin 1.25mm Pitch Disconnectable Crimp Style Connector	

Note: Single-turn configurations with control-section position S/HS do not have this interface. More details for multi-turn battery instruction, please refer to Chapter 10.

5.5 48V Power Supply Interface

Pin	Terminal Label	Terminal Function
1	DC+	Power Supply Positive
2	DC-	Power Supply Negative
Pin Layout		Connector
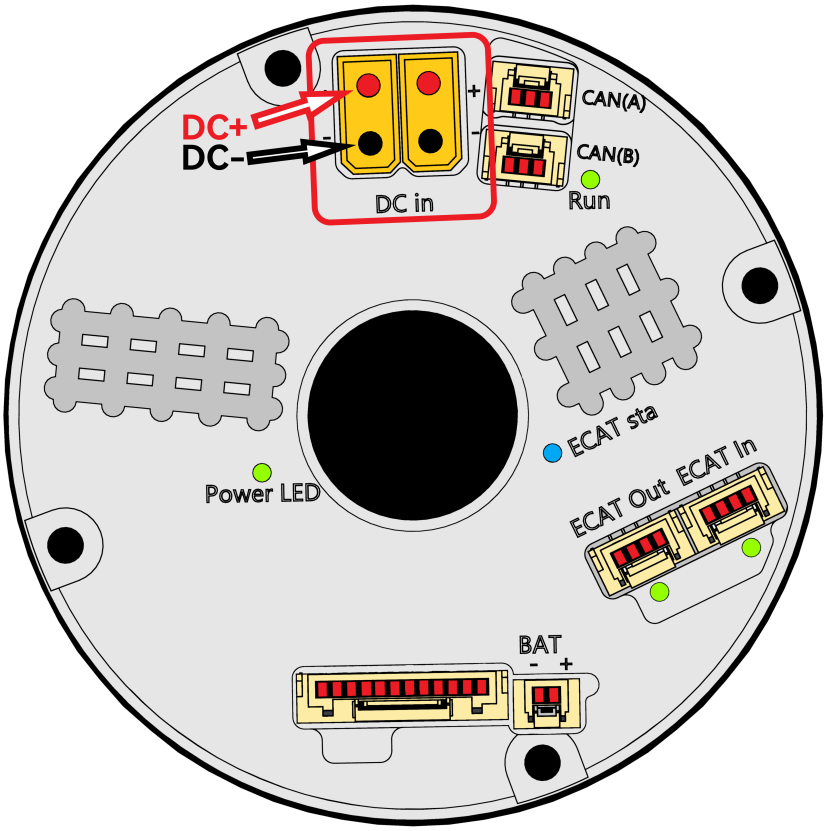		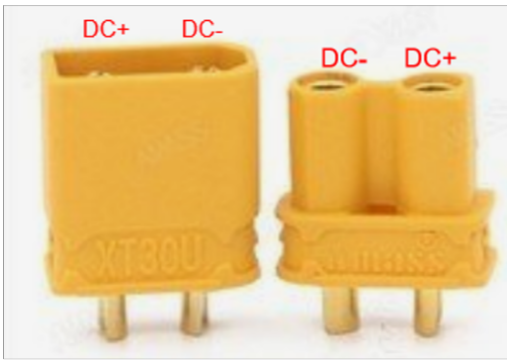 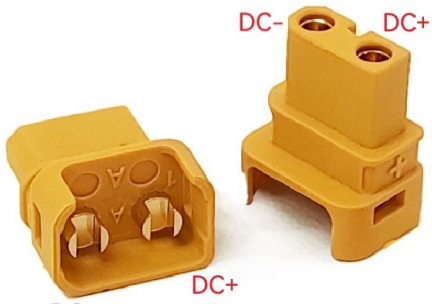 Left-Angled XT30ULW-F A  Right-Angled XT30ULW-F B
Header Information		Connector Information
Model: XT30UPB-M		Manufacturer: AMASS Model: XT30U-F
Specification: AMASS Top Entry 2Pin 5mm Pitch Straight Pin Connector With 2mm Pin Length		

5.6 I/O Signal Terminal

Pin	Terminal Label	Terminal Function
1	RS485-A	RS485 COM Interface DATA+
2	RS485-B	RS485 COM Interface DATA-
3	IN1- / Pulse- /STOA-	Digital Input DIn1 / Pulse Command Signal / STOA
4	IN1+/ Pulse+ /STOA+	
5	IN2- /Dir- /STOB-	Digital Input DIn2 / Pulse Command Direction / STOB
6	IN2+ /Dir+ /STOB+	
7	OUT_COM	Programmable output signal ground
8	OUT_1	Programmable digital output 1
9	OUT_2	Programmable digital output 2
10	GND	Signal ground
11	ANALOG1+	Analog signal input + (input range -10V ~+10V)
12	ANALOG1-	Analog signal input- (input range -10V ~+10V)

Pin Layout	Connector
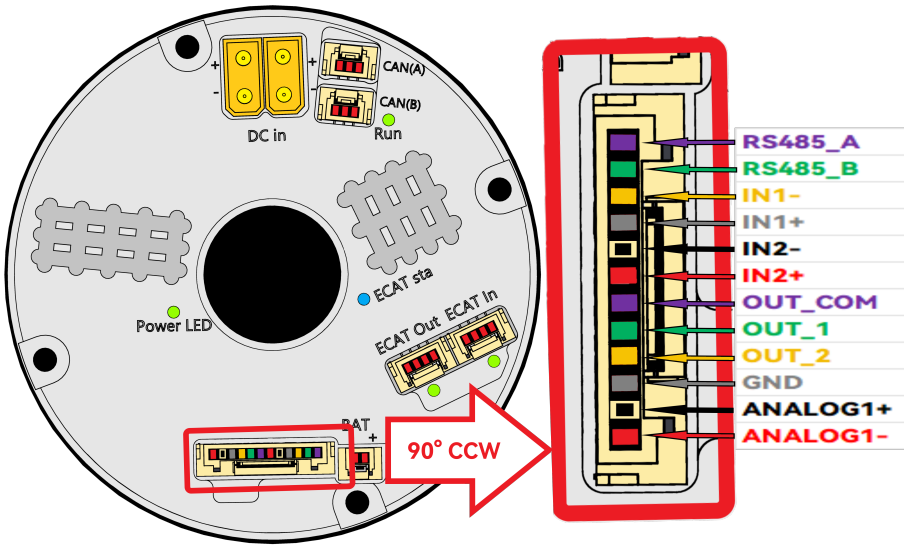	
Header Information	**Connector Information**
Model: BM12B-GHS-TBT	Manufacturer: JST Housing Model: GHR-12V-S Contact Model: SSHL-002T-P0.2
Specification: JST Top Entry Single Row 12Pin 1.25mm Pitch Disconnectable Crimp Style Connector	

5.7 ESD Standard Specifications

Table 5-1 lists the ESD immunity parameters of the eRob rotary actuator.

Table 5-1 eRob Rotary Actuator ESD Immunity

Item	Parameter
Applicable equipment	eRob rotary actuator
Test standard	IEC 61000-4-2
Contact discharge	±4kV; performance criterion A
Air discharge	±8kV; performance criterion A

Performance criterion A: normal operation is maintained during and after the disturbance. ESD performance after integration also depends on grounding, cables and installation. Complete the wiring and grounding as instructed in this manual, and verify the immunity of the complete system.

5.8 Cable Specification Explanation

Table 5-2 eRob Rotary Actuator Module Wire Specification

Series Code	COM Port	Wire Count × Port Count	Wire Recommendation		Wire Connection Reserve Height (mm)
			Cross-Section Area (mm^2)	AWG#	
Universal Specification	CAN COM Port: CAN(A) & CAN(B)	3P×2	0.05~0.13	30~26	10
	EtherCAT COM Port: ECAT In & ECAT Out	4P×2	0.05~0.13	30~26	10
	I/O Port	12P×1	0.05~0.13	30~26	10
	Multi-Turn Func. Battery Port: BAT	2P×1	0.05~0.13	30~26	10
eRob70	48V Power Input Port: DC In	2P×2	0.5	20	15
eRob80		2P×2	0.75	19	15
eRob90		2P×2	1	18	15
eRob110		2P×2	1.25	17	15
eRob142		2P×2	1.5	16	15
eRob170		2P×2	1.5	16	15

5.9 Force Instruction of Connector

The permissible tensile force of connection between JST terminal and wire is shown in Table 5-3, and the tensile test is shown in Figure 5-2a.

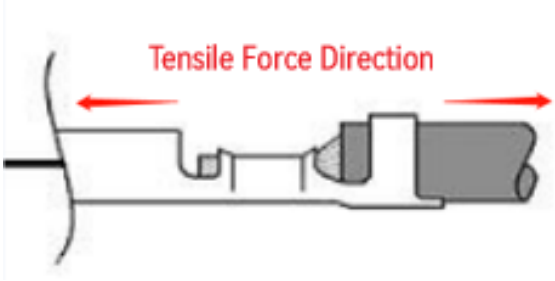

(a) Tension Testing of Connection Between JST Terminal and Wires

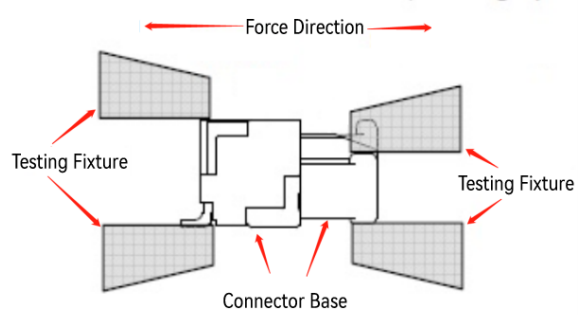

(b) Tension Testing of the Male/Female Head Buckles of Connector

Figure 5-2 Tension Testing Illustrations

Table 5-3 Permissible Tensile Force of Connection Between JST Terminal and Wire

AWG	Standard Value (N)	Actual Value (N)
AWG #26	≥ 20	33 ~ 39
AWG #28	≥ 10	21 ~ 26
AWG #30	≥ 5	14 ~ 18

The permissible tensile force of the male/female head buckles of JST connector are shown in Table 5-4, and the tension testing is shown in Figure 5-2b. Do not unplug the wiring terminal directly from the interface. Release the latch first, and then pull it out gently. Pulling out terminal directly may cause the buckle breakage and unstable connection.

Table 5-4 Permissible Tensile Force of Male/Female Connector Connecting to Buckle

Pin Number	2 ~ 3	4 ~ 6	7 ~ 9	10 ~ 15
Min. Value (N)	10	12	15	20

The bases of four types of connectors are all GHS-TBT type, and the sizes of the four solder pads are the same. Therefore, the permissible thrust force of A-direction is no more than 3N, and the permissible thrust force of B-direction is no more than 4.2N. as shown in Figure 5-3a and Figure 5-3b

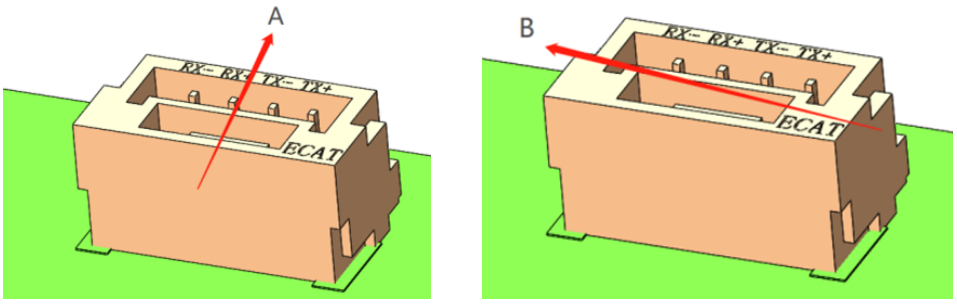

(a) A-Direction Force GHS-TBT Connector Housing (b) B-Direction Force GHS-TBT Connector Housing

Figure 5-3 Direction of Force Applied on GHS-TBT Connector Housing

5.10 Force Instruction of Power Terminal

(1) When pulling in or pulling out the power plug, please plug and unplug the power terminal female head in vertical direction, as shown in Figure 5-4a. The vertical tensile force limit of the male power terminal is about 170N, and its horizontal bending moment limit is about 0.4Nm. Do not shake the power terminals from side to side at any time. As shown in Figure 5-4b, shaking from side to side may cause the power terminals to fall off easily.

(2) To prevent the power terminals from coming loose or making poor contact due to vibration, pulling or other factors during operation, it is necessary to install plug retainers after connecting the power terminals. The installation steps are:
   (1) Weld the power cable to the power terminal female head;
   (2) Insert the power terminal female head, as shown in Figure 5-4c;
   (3) Install the plug retainer and lock it firmly, as shown in Figure 5-4d.

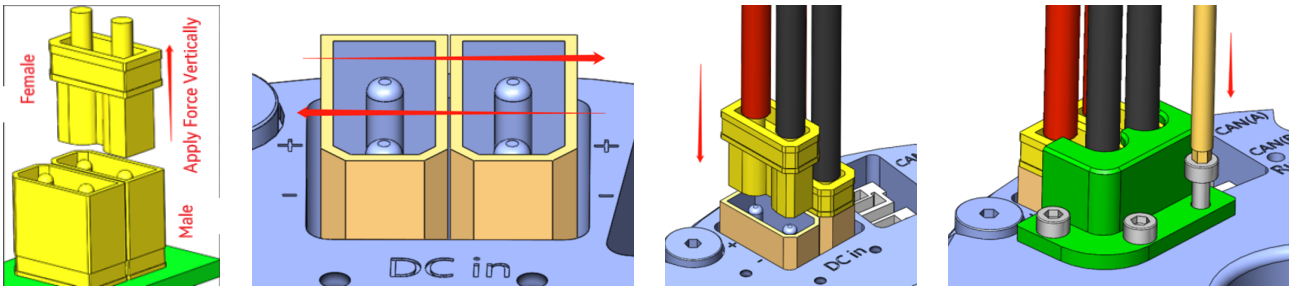

(a) Plug and Unplug in Vertical Direction (b) Do Not Shake Power Terminal from Side-to-Side (c) Plug Female Power Terminal (d) Plug Retainer Installation

Figure 5-4 Power-Terminal Handling and Plug-Retainer Installation

NOTE: (1) **Screw Size & Retainer**
The locking screws of plug retainers are M1.6×4. The plug retainers can be purchased via our official website.

(2) **Warranty**
The eRob warranty does not cover irreversible damage caused by arcing due to loose or poorly connected power terminals when plug retainers are not installed and the actuator is subjected to vibration, pulling or similar factors.

Chapter 6 Cable Wiring Among Rotary Actuators

Cable wiring among rotary actuators is as shown in Figure 6-2. EtherCAT networking adopts direct wiring mode. Connect the RJ45 network port of the master controller to ECAT In port of the first eRob (Slave1), and connect the ECAT Out port of the first eRob (Slave1) to the ECAT In port of the next eRob and so on. The corresponding eRob network port pin sequence of the RJ45 network port is as shown in Figure 6-1. Connect CAN networking cables according to port definitions, and the CAN port of the two adjacent eRobs can be connected in random order. Refer to Section 6.1 for the wiring method of the power supply; refer to Section 6.2 for the CAN/CANopen communication wiring, and refer to Section 6.3 for the EtherCAT communication wiring.

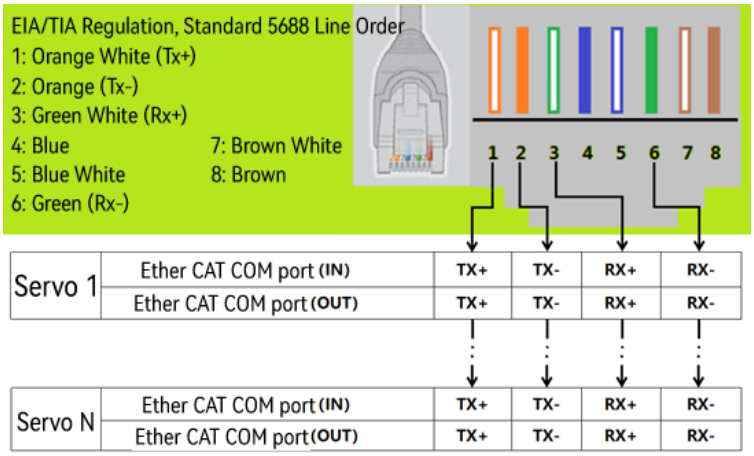

Figure 6-1 EtherCAT Networking Connection Mode

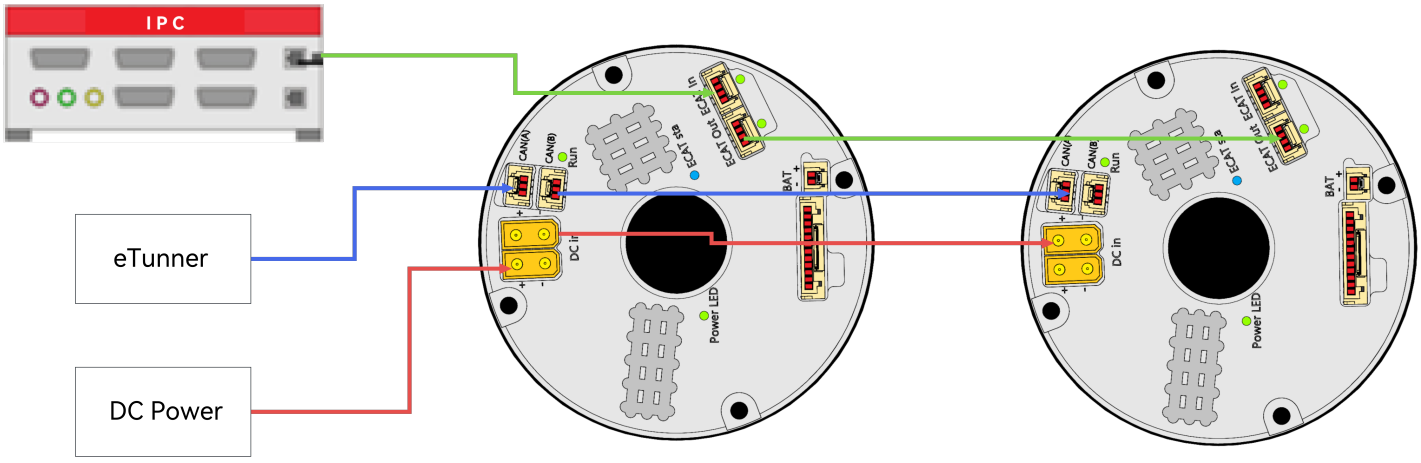

Figure 6-2 Cable Wiring Among Rotary Actuators Illustration

6.1 Power Supply Wiring Illustration

There are three power wiring methods for the eRob modules: direct wiring for single eRob, tree topology wiring, and chain topology wiring (as shown in Figure 6-3a, Figure 6-3b and Figure 6-3c). Under the condition of applying multiple eRobs which are powered by 48V, according to the actual test results of the voltage drop of each eRob, the recommended order of adopting the three wiring modes is:

(1) **Direct Wiring Mode (as shown in Figure 6-3a)**
the best mode, minimum wiring resistance, minimum voltage drop of wire consumption, suitable for high-power eRob;
(2) **Tree Topology Wiring Mode (as shown in Figure 6-3b)**
the better mode;
(3) **Chain Topology Wiring Mode (as shown in Figure 6-3c)**
the least recommended mode, larger wiring resistance, larger voltage drop of wire consumption, suitable for low-power eRob .

CAUTION:
Please use direct wiring for single eRob method when using eRob90/110/142/170. Otherwise, it is easily to appear error reports of the too low bus voltage and too high bus voltage during running.
Do not connect other electrical devices in series. Other electrical devices may cause unpredictable voltage drop or voltage rise and cause a failure.

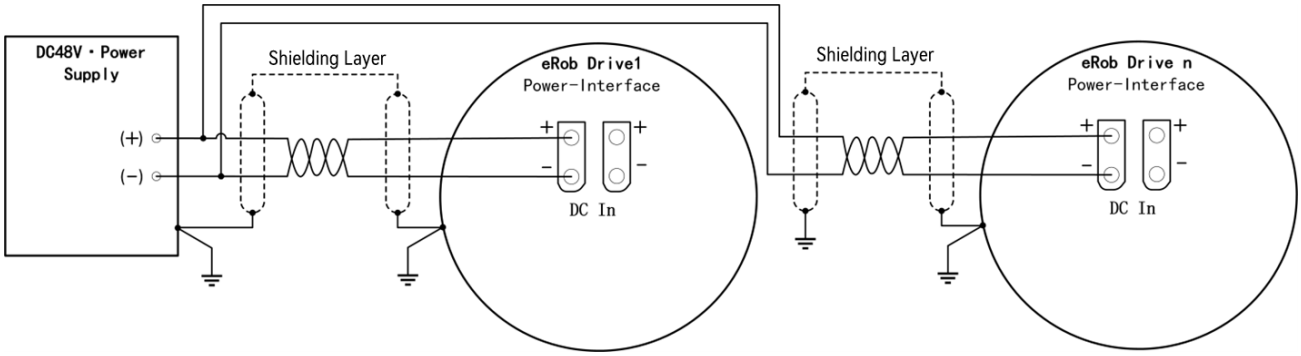

(a) Point-to-Point Topology

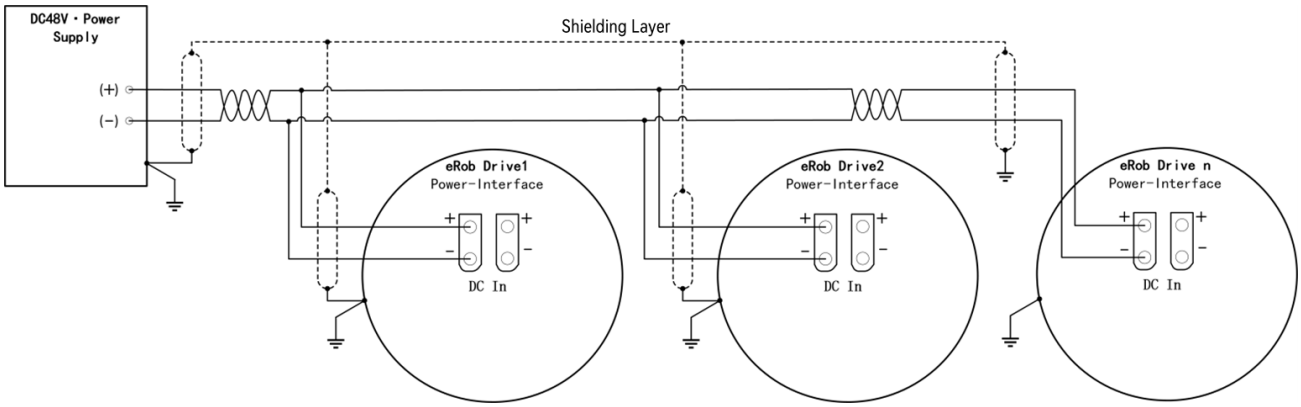

(b) Tree Topology

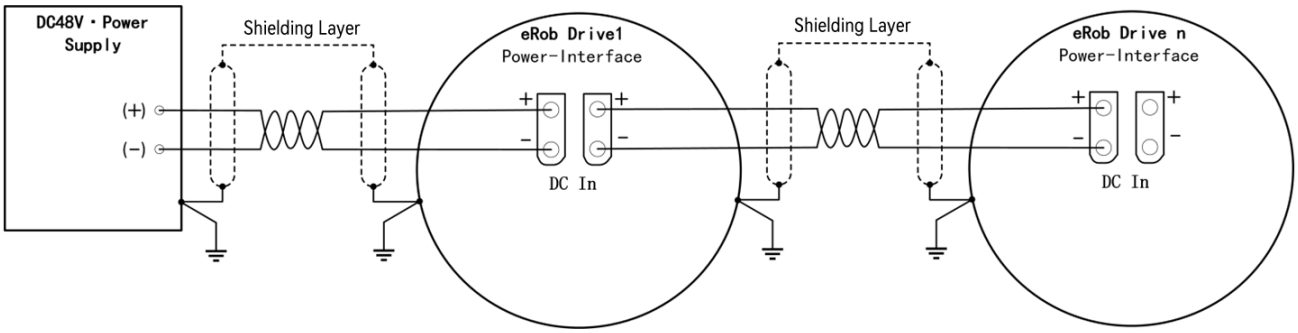

(c) Daisy Chain Topology

Figure 6-3 Wiring Topologies of eRobs

6.1.1 Examples of Collaborative Robot Power Wiring

3 kg Payload Collaborative Robot Arm Example(as shown in Figure 6-4):

Note: Due to the adoption of a chain topology connection, it is recommended to use specific power cable specifications for each axis to ensure optimal performance and reliable power transmission.

(1) **DC48V → J1 axis**
For the connection between the DC48V power supply output and the J1 axis, it is highly recommended to use power cables with a minimum cross-sectional area of ≥1mm² (18AWG). This ensures sufficient power delivery and minimizes power losses.

(2) **Consecutive connections from J1 through J3**
Similarly, for each consecutive connection from J1 through J3, it is advised to use power cables with a minimum cross-sectional area of ≥1mm² (18AWG) to maintain efficient power transfer and prevent voltage drops.

(3) **J3 → J5 axis**
When connecting J3 to J5 axes, it is recommended to use power cables with a minimum cross-sectional area of ≥0.75mm² (19AWG) to meet the power requirements and ensure stable power transmission.

(4) **J5 → J6 axis**
Lastly, for the connection between J5 and J6 axes, it is recommended to use power cables with a minimum cross-sectional area of ≥0.5mm² (20AWG) to ensure reliable power transmission.

By following these cable specifications, you can ensure proper power distribution and minimize potential issues related to power supply, thereby optimizing the overall performance of the system.

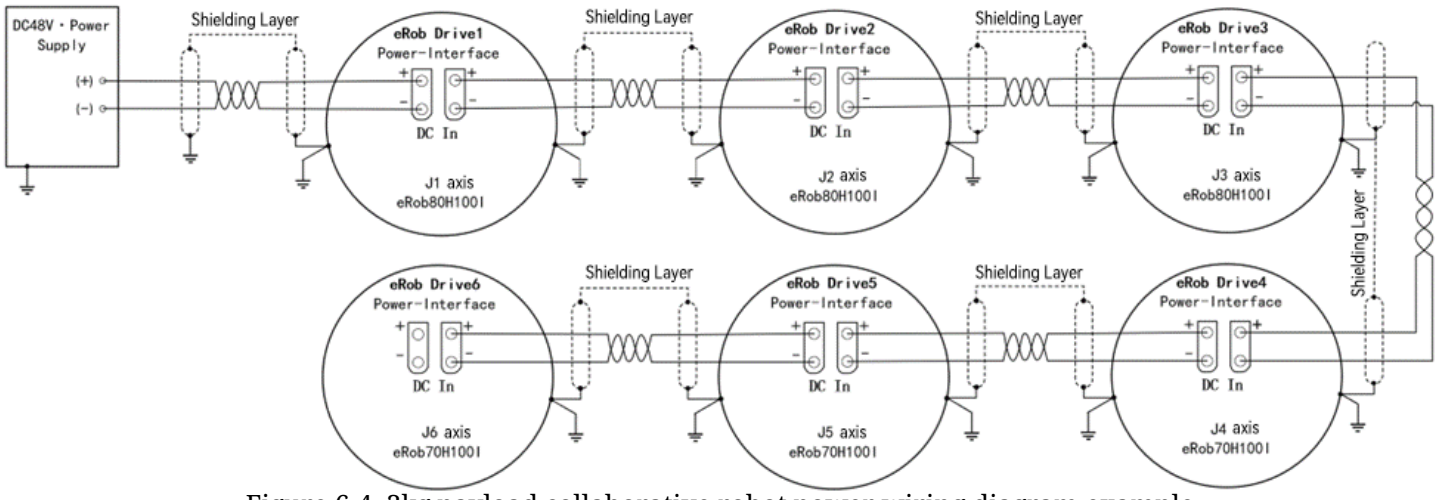

Figure 6-4 3kg payload collaborative robot power wiring diagram example

5 kg Payload Collaborative Robot Arm Example(as shown in Figure 6-5):
Note: Due to the adoption of a chain topology connection, it is recommended to use specific power cable specifications for each axis to ensure optimal performance and reliable power transmission.

(1) **DC48V → J1 axis**
For the connection between the DC48V power supply output and the J1 axis, it is highly recommended to use power cables with a minimum cross-sectional area of ≥1.5mm² (16AWG). This ensures sufficient power delivery and minimizes power losses.

(2) **Consecutive connections from J1 through J3**
Similarly, for each consecutive connection from J1 through J3, it is advised to use power cables with a minimum cross-sectional area of ≥1.5mm² (16AWG) to maintain efficient power transfer and prevent voltage drops.

(3) **J3 → J5 axis**
When connecting J3 to J5 axes, it is recommended to use power cables with a minimum cross-sectional area of ≥0.75mm² (19AWG) to meet the power requirements and ensure stable power transmission.

(4) **J5 → J6 axis**
Lastly, for the connection between J5 and J6 axes, it is recommended to use power cables with a minimum cross-sectional area of ≥0.5mm² (20AWG) to ensure reliable power transmission.

By following these cable specifications, you can ensure proper power distribution and minimize potential issues related to power supply, thereby optimizing the overall performance of the system.

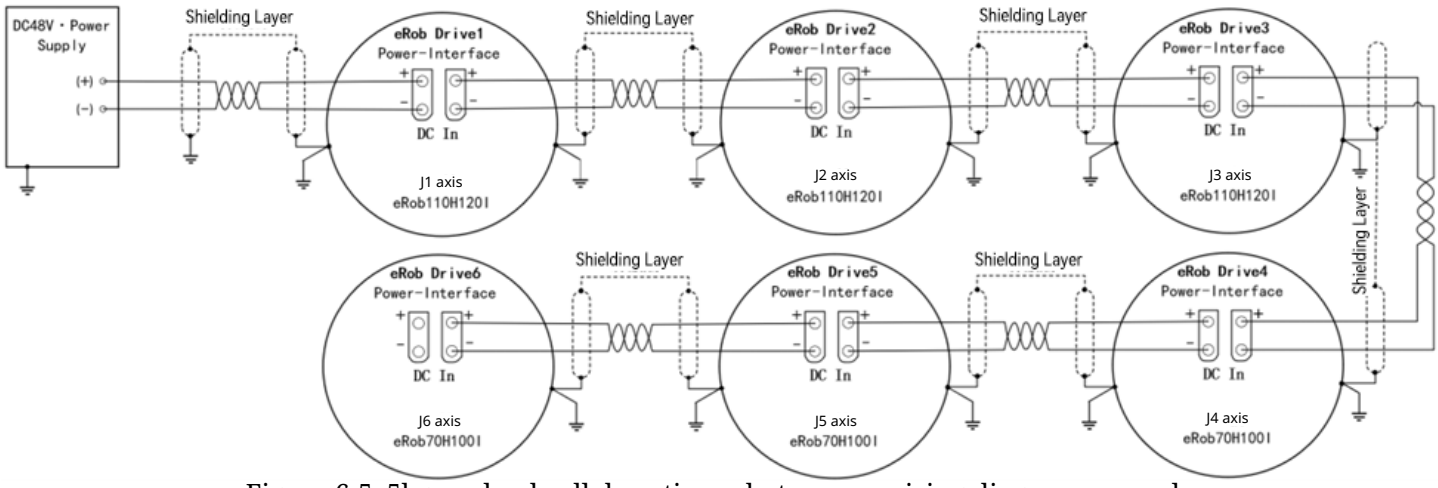

Figure 6-5 5kg payload collaborative robot power wiring diagram example

10 kg Payload Collaborative Robot Arm Example(as shown in Figure 6-6):
Note: Due to the adoption of both single-axis direct connection and chain topology connection, it is recommended to use specific power cable specifications for each axis to ensure optimal performance and reliable power transmission.

(1) **DC48V → J1 & J2 & J3 axis**
For the connection between the DC48V power supply output and the axes J1, J2, and J3, it is recommended to use power cables with a minimum cross-sectional area of ≥1.5mm² (16AWG). This ensures sufficient power delivery and minimizes power losses.

(2) **J3 → J5 axis**
When connecting J3 to J5 axes, it is advised to use power cables with a minimum cross-sectional area of ≥1mm² (18AWG) to maintain efficient power transfer and prevent voltage drops.

(3) **J5 → J6 axis**
Similarly, for the connection between J5 and J6 axes, it is recommended to use power cables with a minimum cross-sectional area of ≥0.75mm² (19AWG) to ensure reliable power transmission.

If the DC48V power supply output is connected to the axes J1, J2, and J3 using branch terminals (such as a two-in, six-out configuration), then for the connection between the DC48V power supply output and the terminal input, it is recommended to use power cables with a minimum cross-sectional area of ≥3mm² (12AWG).

By following these cable specifications, you can ensure proper power distribution and minimize potential issues related to power supply, thereby optimizing the overall performance of the system.

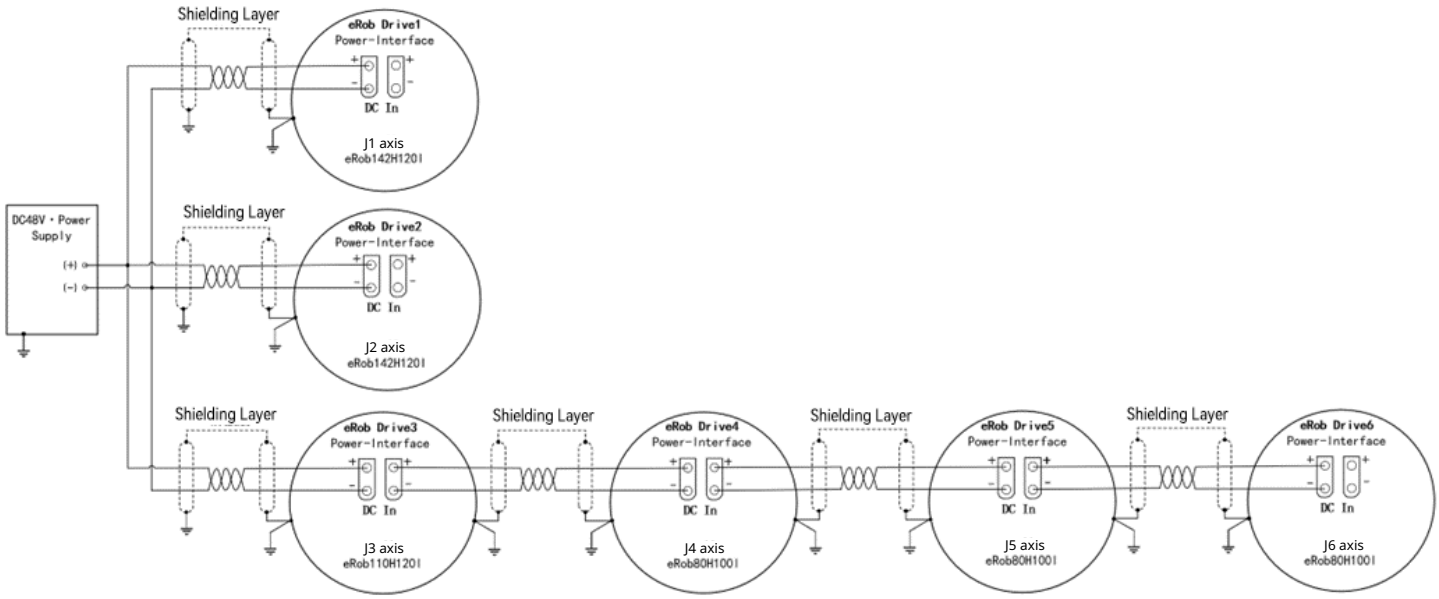

Figure 6-6 10kg payload collaborative robot power wiring diagram example

20 kg Payload Collaborative Robot Arm Example(as shown in Figure 6-7):
Note: Due to the adoption of both single-axis direct connection and chain topology connection, it is recommended to use specific power cable specifications for each axis to ensure optimal performance and reliable power transmission.

(1) **DC48V → J1 & J2 & J3 axis**
For the connection between the DC48V power supply output and the axes J1, J2, and J3, it is recommended to use power cables with a minimum cross-sectional area of ≥1.5mm² (16AWG). This ensures sufficient power delivery and minimizes power losses.

(2) **DC48V → J4 axis & J4 → J5 axis**
When connecting the DC48V power supply output to the J4 axis and the J4 axis to the J5 axis, it is advised to use power cables with a minimum cross-sectional area of ≥1.25 mm² (17 AWG) to maintain efficient power transfer and prevent voltage drops.

(3) **J5 → J6 axis**
Similarly, for the connection between J5 and J6 axes, it is recommended to use power cables with a minimum cross-sectional area of ≥1 mm² (18 AWG) to ensure reliable power transmission.

If the DC48V power supply output is connected to the axes J1, J2, J3 and J4 using branch terminals (such as a two-in, eight-out configuration), then for the connection between the DC48V power supply output and the terminal input, it is recommended to use power cables with a minimum cross-sectional area of ≥6 mm² (9 AWG).
By following these cable specifications, you can ensure proper power distribution and minimize potential issues related to power supply, thereby optimizing the overall performance of the system.

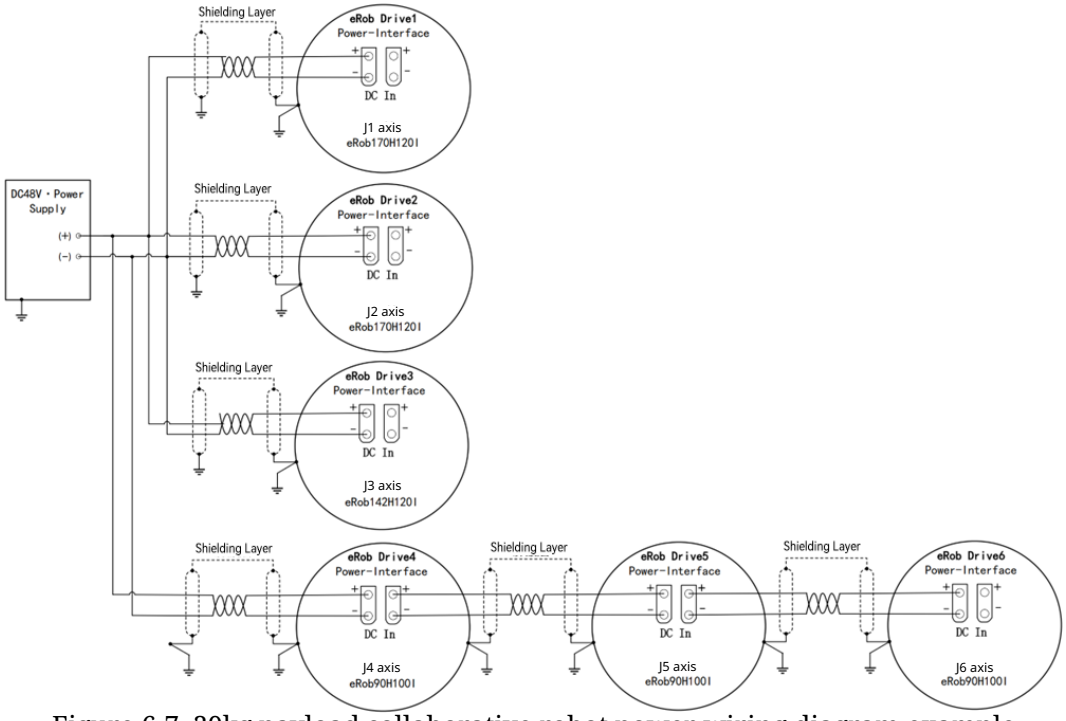

Figure 6-7 20kg payload collaborative robot power wiring diagram example

6.2 CAN/CANopen Communication Wiring Diagram (as shown in Figure 6-8)

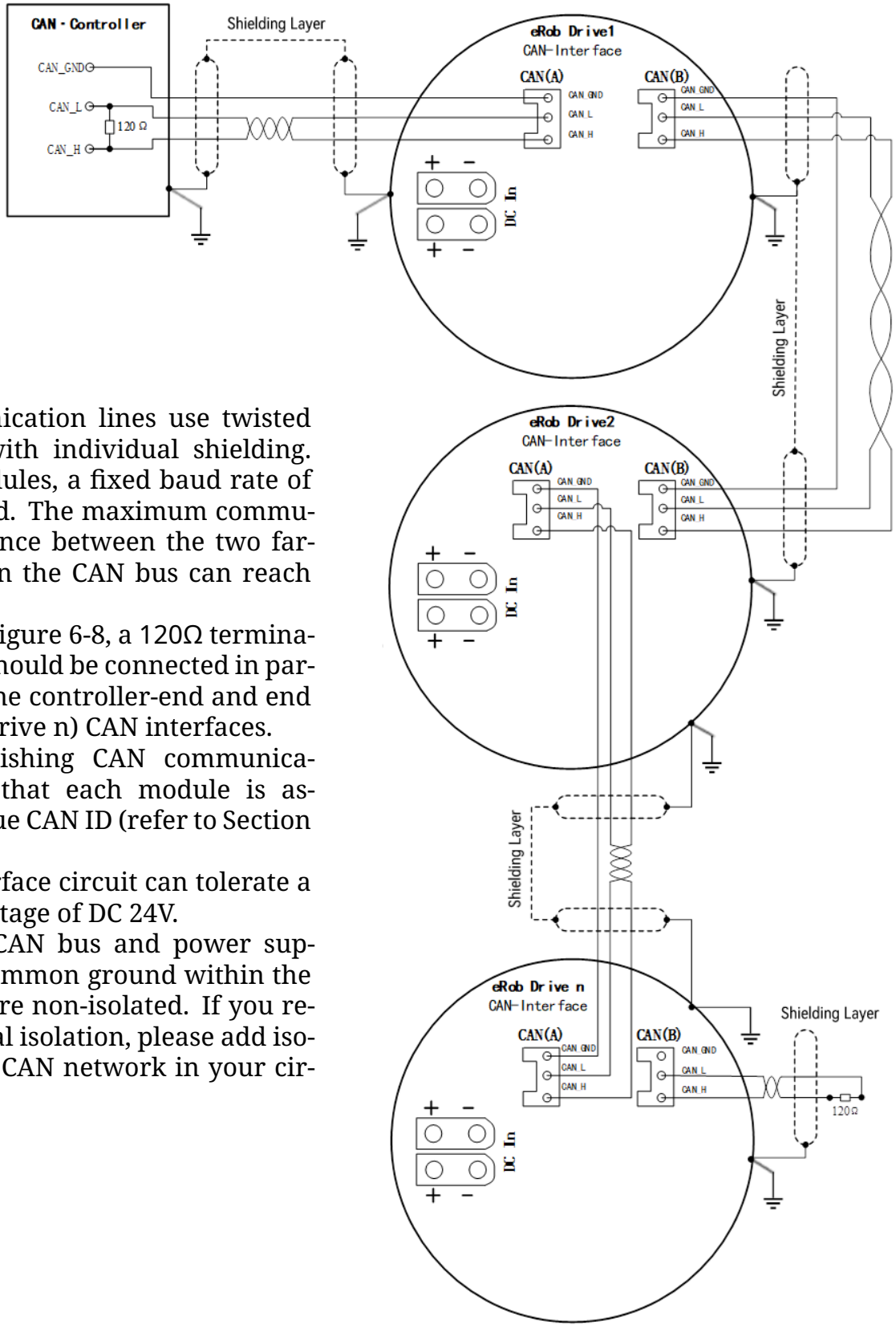

NOTES:

(1) CAN communication lines use twisted pair cables with individual shielding. For eRob modules, a fixed baud rate of 1 Mbps is used. The maximum communication distance between the two farthest nodes on the CAN bus can reach 25*m*.

(2) As shown in Figure 6-8, a 120Ω termination resistor should be connected in parallel to both the controller-end and end servo (eRob Drive n) CAN interfaces.

(3) Before establishing CAN communication, ensure that each module is assigned a unique CAN ID (refer to Section 27.1.2).

(4) The CAN interface circuit can tolerate a maximum voltage of DC 24V.

(5) The module CAN bus and power supply share a common ground within the module and are non-isolated. If you require electrical isolation, please add isolation for the CAN network in your circuit.

Figure 6-8 CAN/CANopen communication wiring diagram

6.3 EtherCAT Communication Wiring Diagram (as shown in Figure 6-9)

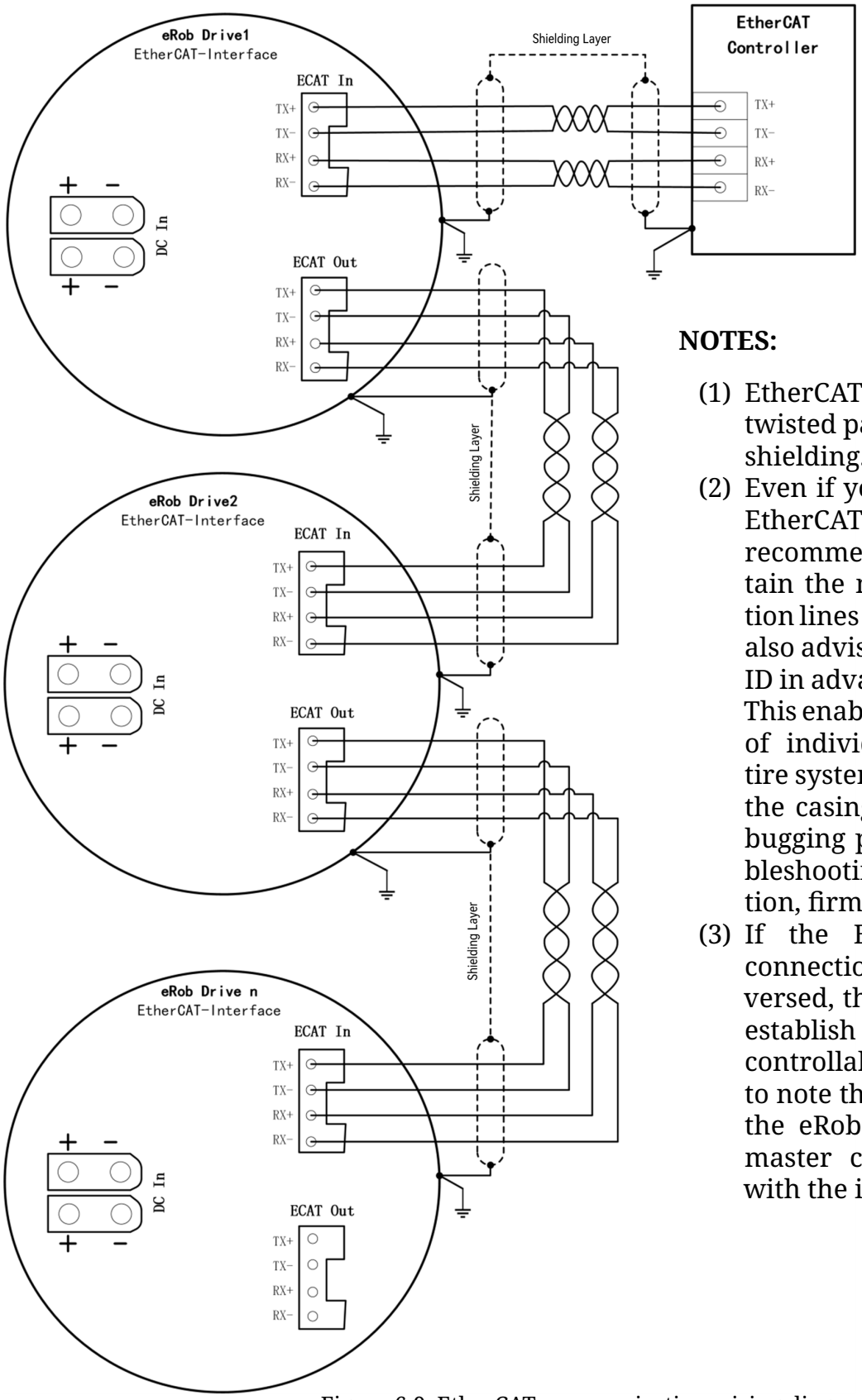

NOTES:

(1) EtherCAT communication lines use twisted pair cables with individual shielding.

(2) Even if you choose a module with EtherCAT communication, it is still recommended to connect and retain the module CAN communication lines in the overall system. It is also advised to set the module CAN ID in advance (refer to Section 6.2). This enables convenient debugging of individual module in the entire system (without disassembling the casing) during subsequent debugging processes, including troubleshooting, parameter modification, firmware upgrades, etc.

(3) If the ECAT_In and ECAT_Out connections are inadvertently reversed, the eRob modules will still establish a connection and remain controllable. However, it is crucial to note that the sequence in which the eRob modules appear in the master controller will not align with the intended configuration.

Figure 6-9 EtherCAT communication wiring diagram

6.4 Modbus-RTU Communication Wiring Diagram (as shown in Figure 6-10)

The Modbus-RTU communication interface is the RS485 communication interface of the I/O terminal of the eRob rotary actuator. The MODBUS master system and the MODBUS slave system can create a multi-point connection bus network. The wiring diagram is shown in Figure 6-10. For details on the use of the Modbus-RTU communication protocol, please refer to the *eRob Modbus-RTU User Manual*.

Notes:

(1) The Modbus-RTU communication lines use twisted pair cables with individual shielding.

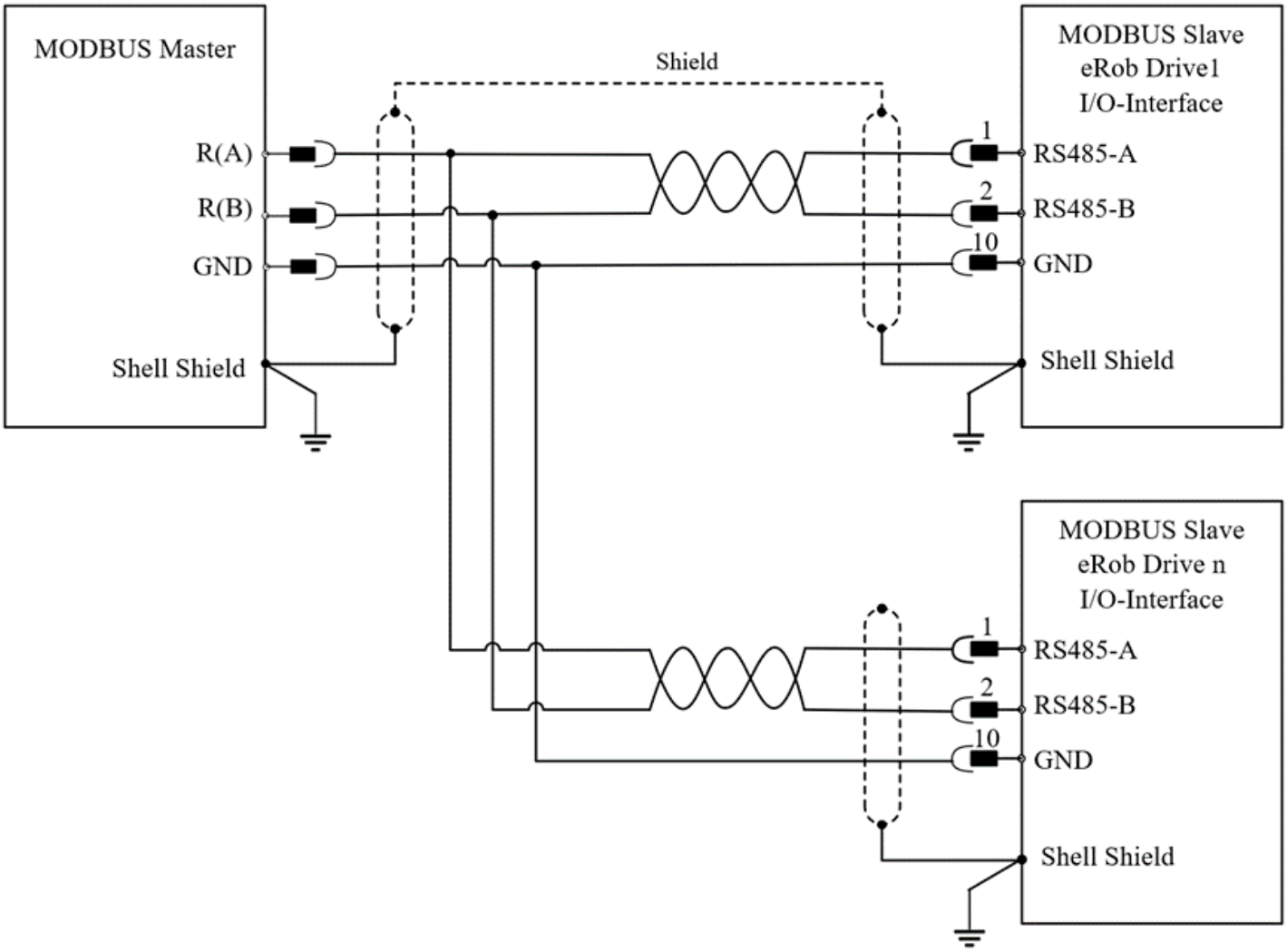

Figure 6-10 Modbus-RTU communication wiring diagram

6.5 I/O Signal Terminal Wiring Diagram

(1) Universal digital input DI terminal (as shown in Figure 6-11):

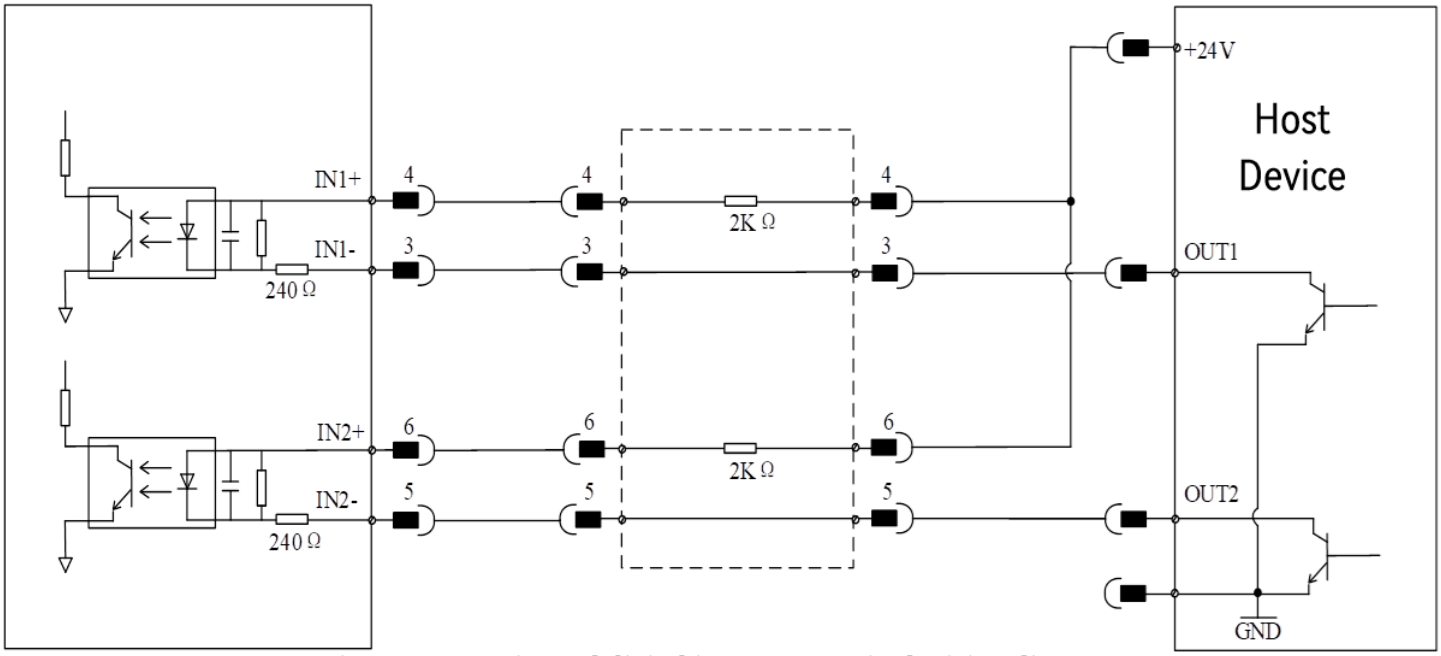

Figure 6-11 Universal digital input DI terminal wiring diagram

(2) Safe Torque Off (STO) function terminal (as shown in Figure 6-12):

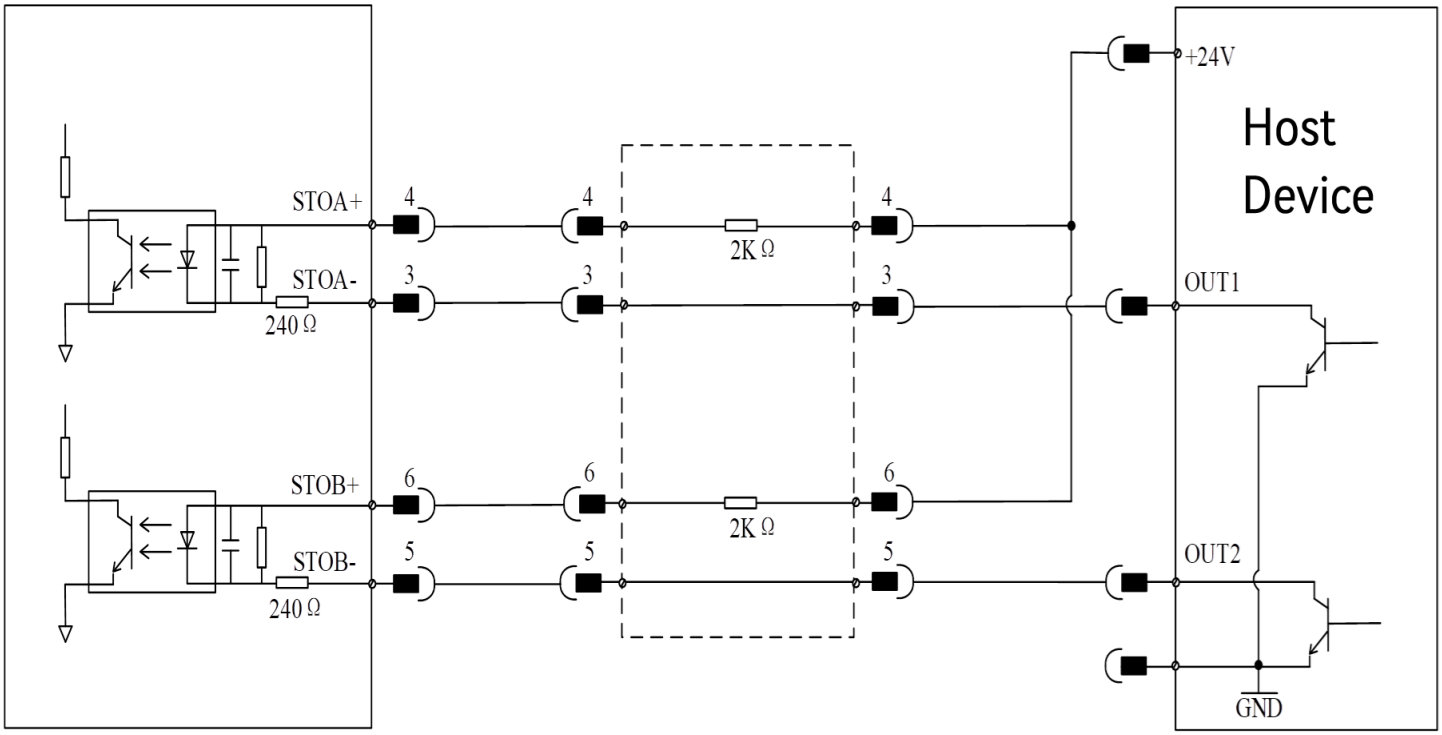

Figure 6-12 Safe torque off (STO) terminal wiring diagram

(3) Pulse direction control terminal

(1) 5V differential mode (as shown in Figure 6-13):

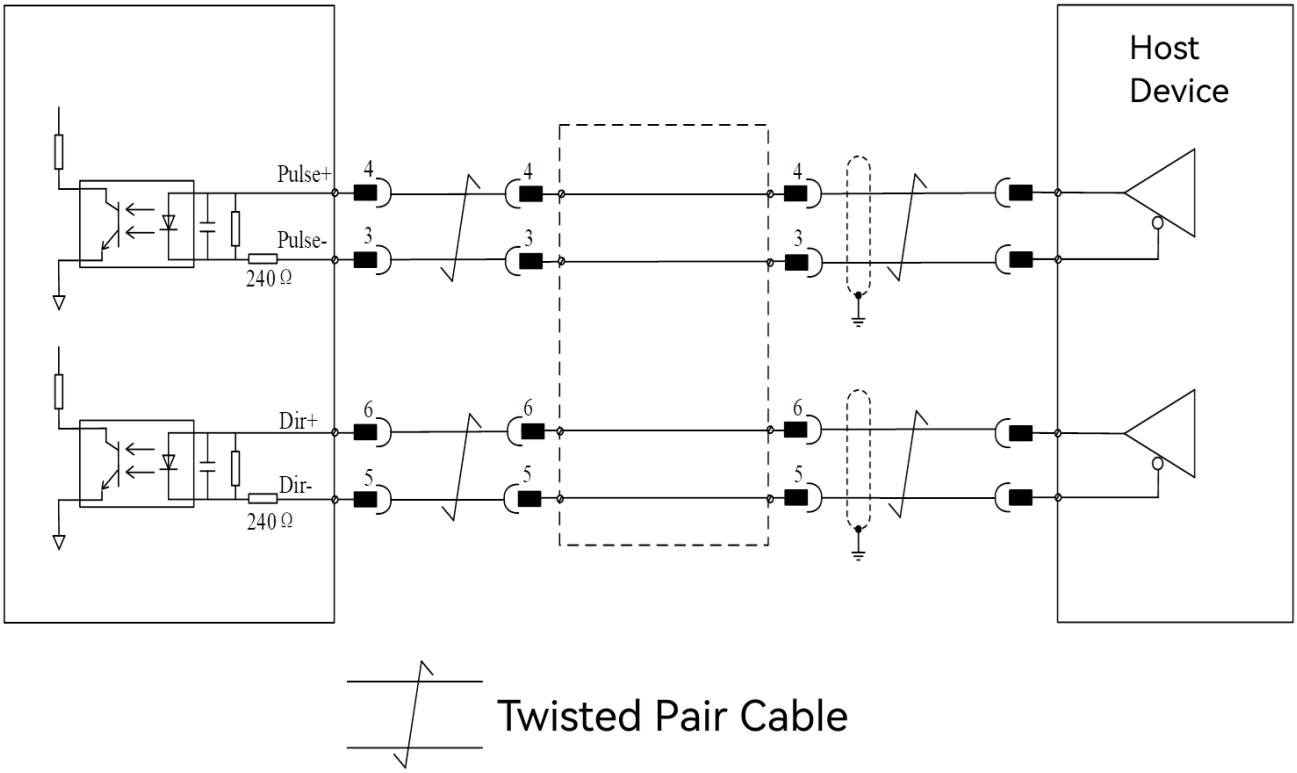

Figure 6-13 5V differential pulse command input terminal wiring diagram

(2) Open collector mode (as shown in Figure 6-14):

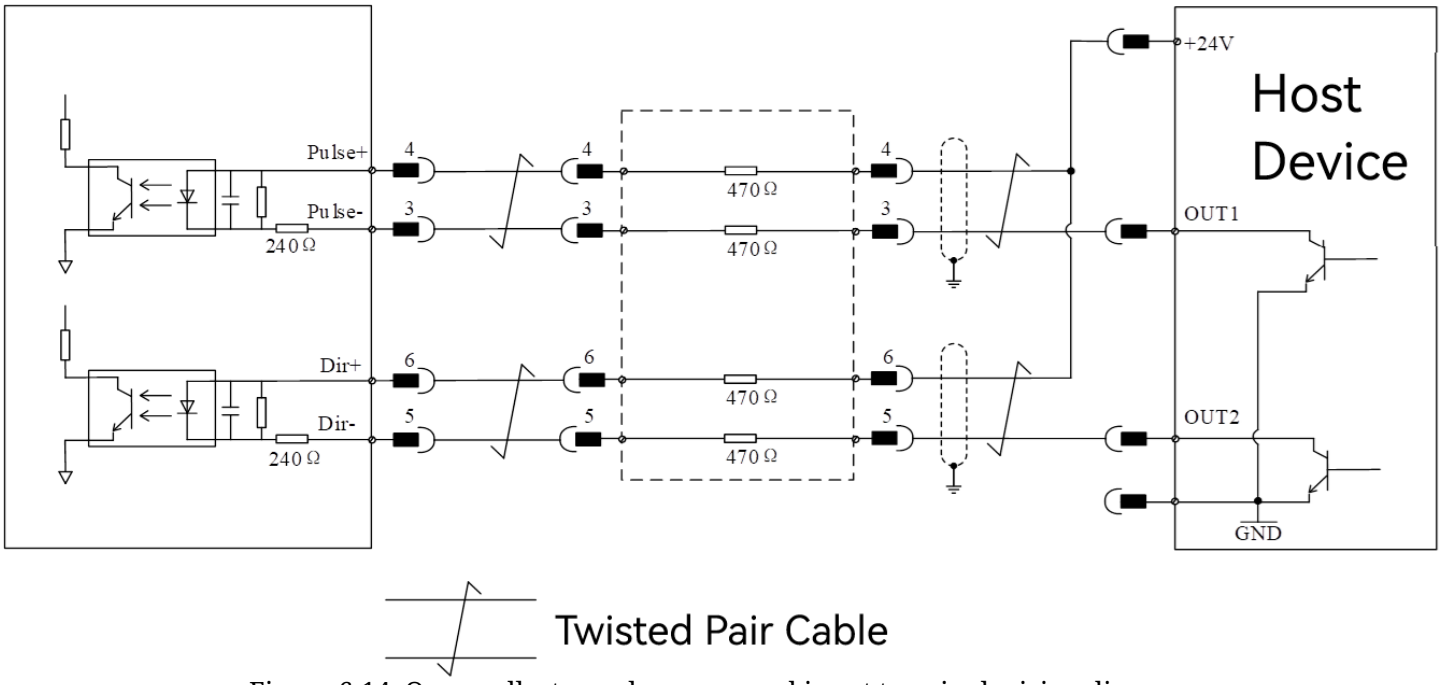

Figure 6-14 Open collector pulse command input terminal wiring diagram

(4) **Digital output DO terminal (as shown in Figure 6-15):**
The permissible maximum voltage and current capacity of the built-in opto-isolator.
- Voltage: DC30V (Max.)
- Current: DC50mA (Max.)

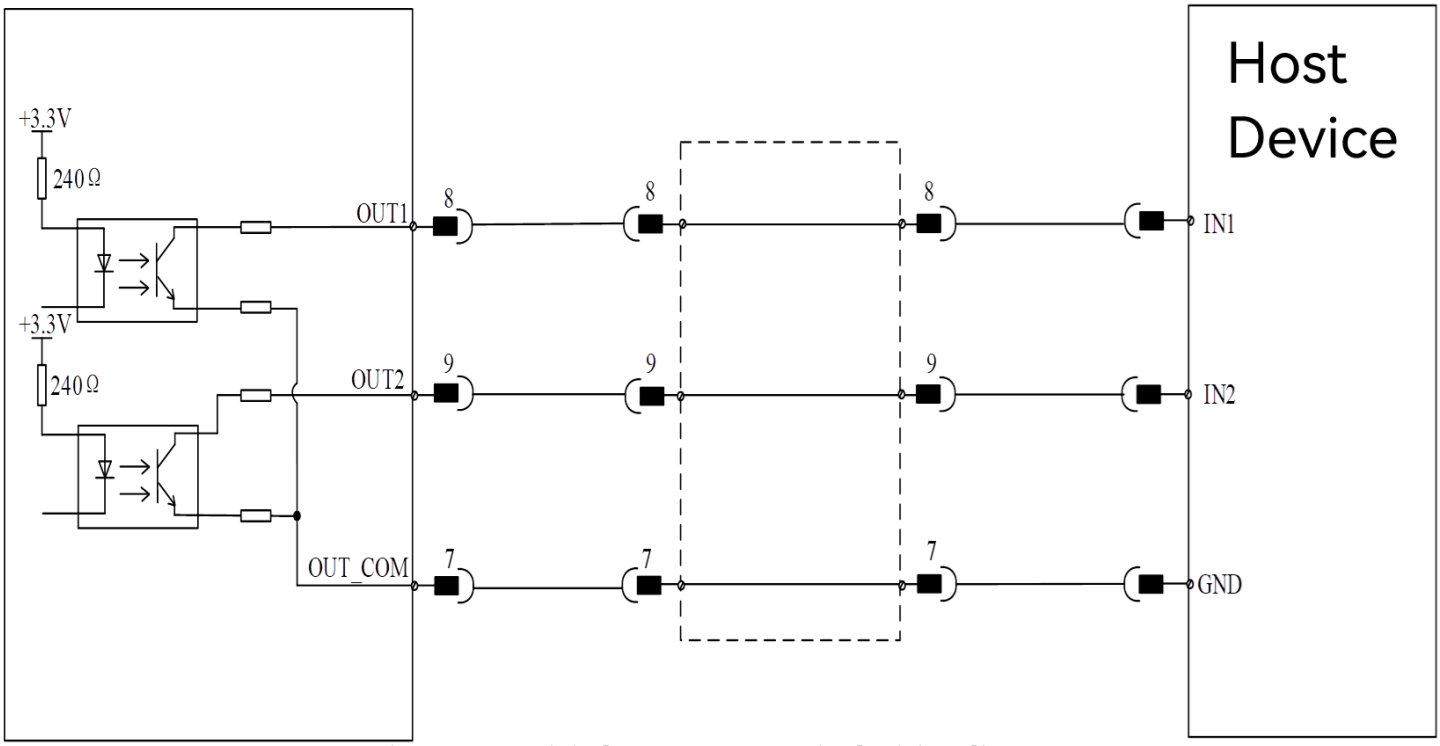

Figure 6-15 Digital output DO terminal wiring diagram

6.6 Important Wiring Instructions

6.6.1 Precautions for Wiring Through Module Central Hole

The rotary actuator is equipped with an extra-large hollow hole with a diameter of 18mm. When wiring the robot, power cables, communication cables, air pipes, and other components can easily pass through the central hole of the module to connect to the next module or devices such as the end gripper of the robotic arm. This enables a convenient and neat internal wiring method for the robot.

Even so, the following points still need attention: If too many cables are routed through the module central hole and the cables are tight (which will increase the resistance of module rotation), and there are protruding objects (such as cable ties) tied to the cables that enter the central hole, external squeezing force will be applied to the central hole. This will cause the end of the output shaft flange to deviate, leading to the deviation of the output encoder code disc installed at the end of the output shaft flange and thus the deviation of the position reading of the output encoder. In addition, if the user passes additional structural parts through the module central hole, it may also exert external squeezing force on the central hole, resulting in such abnormalities. Therefore, do not route too many cables through the module central hole; the cables should be reserved with sufficient length to avoid being tight. Do not pass additional structural parts through the module central hole, and do not apply excessive pressure to the inner wall of the module central hole. In addition, during installation, wiring, and other processes, ensure that no metal chips fall into the electrical interfaces of the module rear cover, through holes, or the gaps of the module central hole (where the output encoder code disc is installed). Otherwise, it

may lead to poor communication or even electrical failures. For more instructions, please refer to the ”Beware of the risk of metal debris entering connector gaps:” in the ”Safety Guide” section of this manual.

6.6.2 Instructions for Cable and Battery Fixing Methods

To prevent poor contact of terminals (which may cause unstable power supply, poor communication, and other faults) or even terminal loosening and damage due to vibration of the module during operation, pulling and shaking of cables during movement, it is necessary to fix the cables and multi-turn power supply battery. Regarding the cable routing method, the fixing methods for cables and batteries can be referred to as follows:

Step 1 Cable Routing
When passing cables through the module central hole, large-size cables should usually be threaded first, followed by small-size cables, to ensure all cables can pass through smoothly in sequence.

Step 2 Installing Cable Bracket
Four M3 screw holes are reserved on the module rear cover (as shown in the red circles in Figure 6-16a). Two of them can be used to install a cable bracket. To further enhance the physical protection of cables and the multi-turn power supply battery and avoid wear, it is recommended to sleeve the cable bracket with heat shrink tubing before installation, as shown in Figure 6-16b.

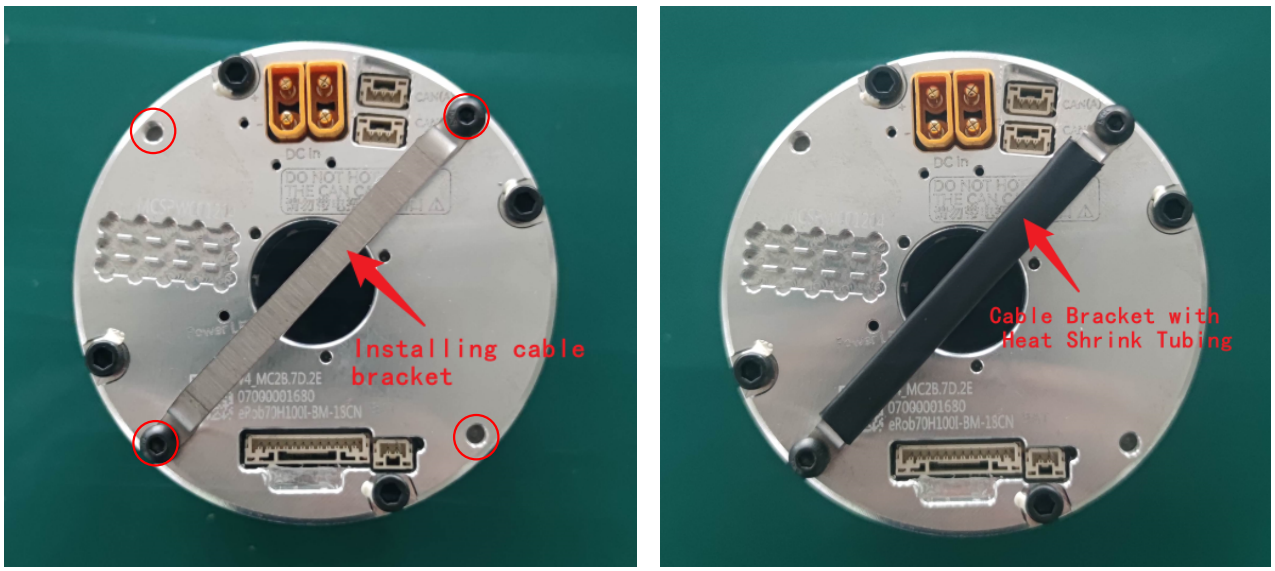

(a) Installing Cable Bracket (b) Cable Bracket with Heat Shrink Tubing

Figure 6-16 Cable Bracket

NOTE: (1) Do not disassemble the original screws on the rotary actuator without authorization, as this will affect the original performance of the module and its warranty.

(2) The thread depth of the reserved M3 screw holes on the module rear cover varies slightly among structural-version codes. Use the complete model on the product nameplate to identify the applicable 2D drawing. Relevant 2D drawings and 3D models are available from the ZeroErr official website.

(3) Cable brackets can be purchased through the "Product Accessories" page on our official website.
For relevant dimensions, please visit the ZeroErr official website (ZeroErr Download) to download relevant 3D models.

(4) When selecting a cable-bracket mounting screw, use the applicable complete model's 2D installation drawing to determine the rear-cover threaded-hole depth, and account for the bracket thickness. Choose a screw length that provides at least the minimum effective thread engagement specified in Table 19-5 of Section 19.4 and does not bottom out in the blind hole. Use M3 hexagon socket head cap screws for the module rear-cover threaded holes shown in Figure 6-16a. The recommended tightening torque is 1.2 N·m, the permissible deviation is ±0.2 N·m, and the minimum effective thread engagement is 3.0 mm; refer to Table 19-5 for the applicable structural-version codes. Do not use the parameters in Tables 19-3 and 19-4, which apply to flange-mounting or actuator-mounting positions.

Step 3 Cable and Battery Fixing

After connecting all cables to the corresponding electrical interfaces, use nylon cable ties to bundle and fix all cables on the cable bracket. Then fix the multi-turn power supply battery on the cable bracket in the same way, as shown in Figure 6-17a.

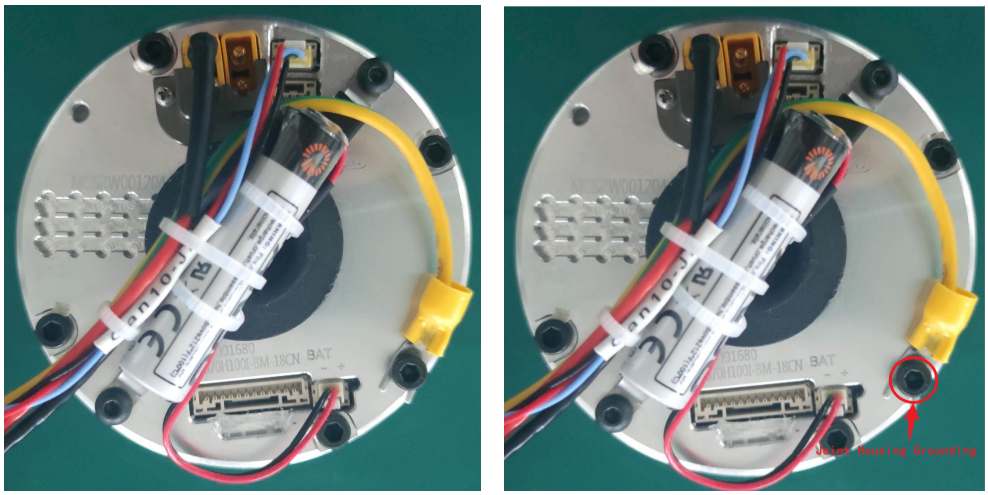

(a) Cable and Battery Fixing (b) Example of Module Housing Grounding

Figure 6-17 Cable and Battery Fixing and Module Housing Grounding

Note: When using cable ties to bundle and fix cables and the battery, do not over-tighten. It is sufficient to fasten them slightly without loosening. Excessive force may damage the cables (especially the battery connector cables) and the battery, while insufficient force may cause loosening and fail to achieve the fixing effect.

6.6.3 Module Housing Grounding

The module housing needs to be grounded (PE). The housing ground wire can be installed and connected through the reserved M3 screw holes on the module rear cover, as shown in the red circles in Figure 6-17b. When using one of these M3 threaded holes to secure a grounding terminal, use the tightening requirements in the corresponding "Module rear cover" row of Table 19-5 in Section 19.4.

Chapter 7 Brake Instruction

7.1 Instruction and Caution

(1) The integrated brake does not require separate power. Simply connect power to the eRob's DC power interface, and the brake will be powered. Please refer to Chapter 3 for the eRob power supply voltage details.
(2) The integrated brake can be used as a static holding brake.
(3) The integrated brake can withstand dynamic brake impact under low load conditions (<10% max torque) and low rotational speed (<10% max speed). However, frequent dynamic braking should be avoided.
(4) If a fault, error, or emergency stop occurs under high speed and heavy load, the brake may engage and irreversibly damage the eRob. Therefore, avoid these conditions during development and tuning.
(5) Exposure to strong magnetic environments may impair brake functionality. Avoid operating in these conditions, or implement magnetic shielding for the eRob when necessary.
(6) In emergencies, if power is unavailable, manually rotate the eRob by applying external force exceeding its static friction torque. The static friction torque values for each series code are detailed in Table 7-1.
(7) When powered, enabling the eRob releases the brake, while disabling it engages the brake. The brake activation time is approximately 150ms. After disabling the eRob, wait at least 300ms before enabling it again. After enabling, wait at least 500ms before issuing motion commands. Please refer to *Section 5.1* of the *eRob CANopen and EtherCAT User Manual* for more detail.

Warning: Rotating rotary actuators by external force can be only used in emergency and it may damage the rotary actuators.If the static friction torque at the module's output exceeds the strain wave gear's instantaneous maximum allowable torque, forced dragging may cause damage to the gear prior to the brake. For details regarding strain wave gear life, please refer to Chapter 24.

Table 7-1 Static Friction Torque of the Integrated Brake at SWG Output (Nm)

Series Code / Gear Ratio	eRob70F	eRob70	eRob80	eRob80F	eRob90	eRob110	eRob142	eRob170
50	30	30	62	44	90	127	281	402
80	40	40	75	-	118	195	395	519
100	50	50	89	61	132	206	433	620
120	-	50	89	-	132	246	497	775
160	-	-	-	-	-	246	497	840

Note: The static friction torque values of the module output ends, listed in Table 7-1, represent the standard qualified values based on factory tests of static brake torque (measured with the power off and module disabled). When the load torque applied to the module output shaft does not exceed the specified standard value, the module will maintain its locked position. However, if the applied load torque exceeds this value, the module may fail to lock properly, potentially causing the load to slip or fall, which could be hazardous. Therefore, do not apply a load torque greater than the specified standard value.

Table 7-2 Static Friction Torque of the Integrated Brake at SWG Input (Nm)

Parameter \ Series Code	eRob70F	eRob70	eRob80	eRob80F	eRob90	eRob110	eRob142	eRob170
Static Friction Torque	0.7		1.3		2.5		4.5	6

7.2 Brake Lifespan

7.2.1 Brake Opening and Closing Times

Brake samples for each module model have undergone over 100,000 engagement tests, and all performance parameters remain normal after the lifespan testing.

7.2.2 The Amount of Forcible Drags While Brake Engaged

The brakes can withstand occasional forced dragging. Each brake undergoes a forced-rotation test of more than 1,000 revolutions while engaged before leaving the factory, and all performance parameters remain normal.

7.3 Method for Forcibly Releasing the Brake (Non-Enabled State)

When the eRob power supply is functioning properly and the motor is not enabled, the eRob can be manually rotated by following the procedure in this section to release the brake, allowing rotation with minimal external force.

Note: Ensure the eRob is stopped and disabled before releasing the brake. Once released, no braking torque is applied, allowing free rotation. If gravity torque is present, the load will not maintain its position. Before releasing the brake, support or remove the load to prevent it from falling and creating a hazard.

7.3.1 eTuner Setup Support Software Operation

Software applicability: This subsection describes eTuner. For eTunerII, see Section D.4. Wiring, standstill and load-support requirements apply to both applications.

Step 1: As shown in Figure 7-1a, install eTuner Setup Support Software on a computer, connect eRob CAN communication interface through eRob to PC Connector, and then supply the eRob with proper power.

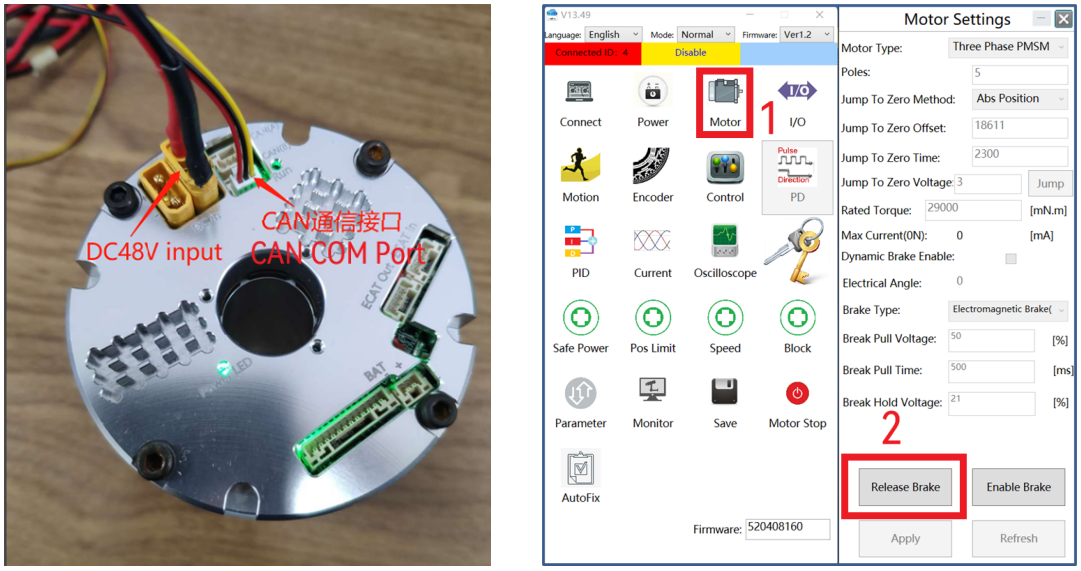

(a) CAN wiring (b) Connect PC and release brake

Figure 7-1 Wiring and Operation Illustration

Step 2: Open eTuner Setup Support Software and open the eTuner main interface. Click "Motor", the"Motor Settings" interface will pop up, as shown in Figure 7-1b.

- "Release Brake": The brake (if equipped) will disengage.
- "Enable Brake": The brake (if equipped) will engage.

Table 7-3 CAN Control Message of Brake

Function	COB-ID	Message
Release Brake	641	01 4F
	5C1	3E
Enable Brake	641	01 00 00 00 00 00
	5C1	3E

Note: The communication mode between PC and servo communication is CAN communication, so brake can also be operated by sending CAN messages. Please refer to *eRunner User Manual* for message protocol.
Take servo ID=1 as an example, sending messages are as shown in Table 7-3.

7.3.2 EtherCAT Operation

Step 1: As shown in Figure 7-2, install master software (TwinCAT3) on a computer or use another master controller with EtherCAT communication, connect to eRob ECAT communication interface via cables, and then supply proper power for the eRob.

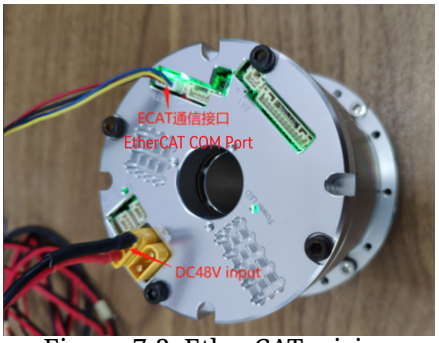

Figure 7-2 EtherCAT wiring

Step 2: Take TwinCAT3 master station as an example, visit "Release Brake" parameter object "4602h (Release brake)" and enter value "1" through SDO, operation methods are shown in Figure 7-3, click "Device 2 (EtherCAT)", click "Drive1(ZeroErr Driver)", click "CoE-Online", pull down to find the object "4602", double left-click the parameter object, the "Set Value Dialog" interface will pop up, enter value "1" in the "Dec", and finally click "OK", the brake is in release status (free brake), and if value "0" is entered, the brake is in close status(with brake).

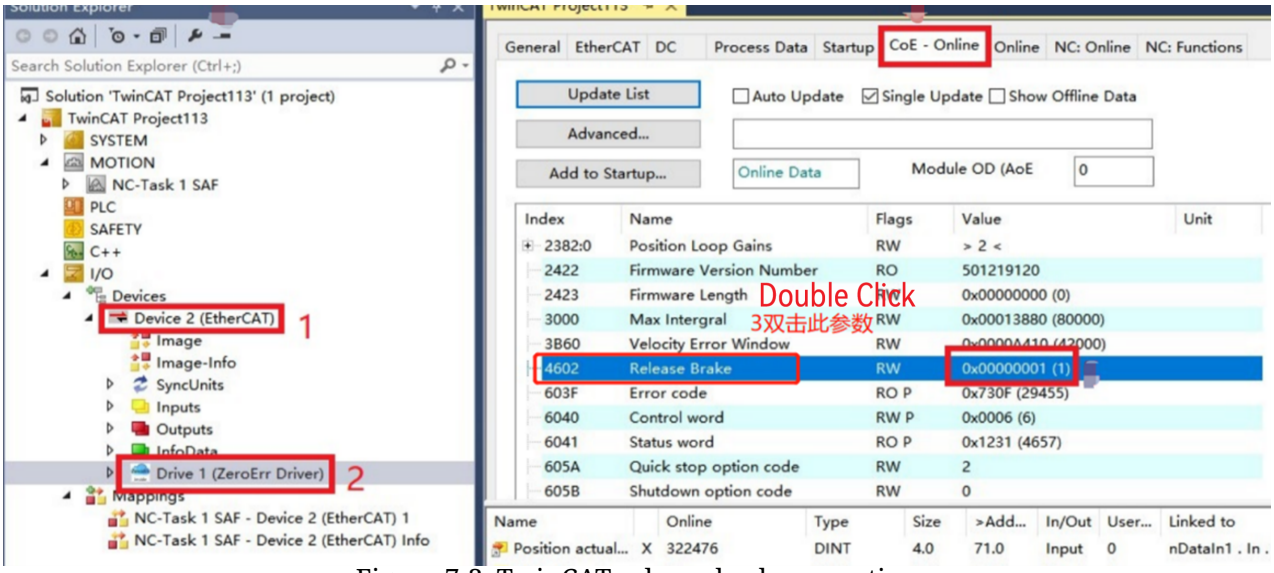

Figure 7-3 TwinCAT release brake operation

7.3.3 CANopen Operation

Step 1: As shown in Figure 7-4, connect the master controller with CANopen communication to the eRob CANopen communication interface (the same physical interface used for CAN communication), and then supply eRob with proper power.



Figure 7-4 CAN wiring

Step 2: Master controller sends CANopen message to operate brake. Refer to *Chapter 3* of *eRob CANopen and EtherCAT User Manual* for message protocol. Take servo ID=1 as an example, sending messages are as shown in Table 7-4.

Table 7-4 CANopen Control Message of Brake

Function	COB-ID	Message
Release Brake	601	23 02 46 00 01 00 00 00
	581	60 02 46 00 00 00 00 00
Enable Brake	601	23 02 46 00 00 00 00 00
	581	60 02 46 00 00 00 00 00

7.4 Abnormal Brake Judgment

Software applicability: The power-supply output-current checks below apply to both applications. For brake release, use Section 7.3.1 for eTuner or Section D.4 for eTunerII.

The brake is abnormal when one of the below conditions occurs:

(1) When the eRob rotary actuator with rated load is not powered on, it slips and cannot be maintained.

(2) Powering on an eRob with DC48V separately and the eRob is in a no-load static status. After 6 seconds of power-on and no operation, the output current of the power supply exceeds the normal value (refer to Table 7-5), and then use eTuner to click to release the brake (Please refer to Section 7.3.1 for details of the operation steps) After 3 seconds, the output current of the power supply exceeds the normal value (refer to Table 7-5).

Table 7-5 eRob Module Power Supply Current when Powered on Separately

Series Code	Power Current After 6 Seconds of Power-On and No Operation (mA)	Power Current After 3 Seconds of Releasing the Brake (mA)
eRob70	35~60	70~120
eRob80	35~60	90~120
eRob90	35~60	175~210
eRob110	35~60	175~210
eRob142	35~60	150~180
eRob170	35~60	150~180

Chapter 8 Kinetic Energy Recovery

8.1 Analysis of the Cause of Kinetic Energy Recovery

When the rotary actuator is powered by a 48V switching power supply, its simplified circuit loop is equivalent to that shown in Figure 8-1a and Figure 8-1b.

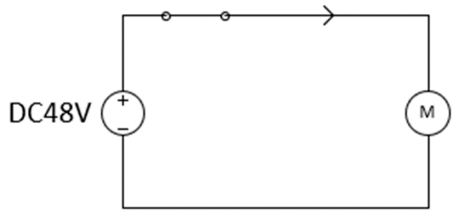

(a) During Normal Operation

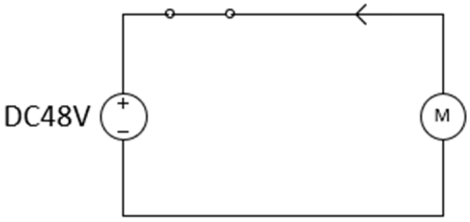

(b) During Decelerating Operation

Figure 8-1 Circuit Illustrations for Different Operation

As shown in Figure 8-1a, when it works properly, the power supply supplies power to the load (motor) and outputs electric energy. As shown in Figure 8-1b, when the load is decelerating, the circuit loop is in the process of kinetic energy recovery. That is, the motor works as a generator, the kinetic energy is converted into electrical energy feedback, and the reverse current continuously charges the capacitor at the power supply end to increase the voltage. Since the recovered kinetic energy (power) is proportional to torque × rotational speed ($E_k \propto (T \times n)$), the speed gets faster, the load gets greater, and the recovered kinetic energy (power) gets higher. When the power supply voltage rises to a value which is greater than the value of the permissible maximum bus voltage set by the drive, the servo will report errors and stop when the bus voltage is too high.

8.2 Solution

There are three processing methods for kinetic energy recovery:

(1) Add bleeder resistor
(2) Add super capacitor
(3) Add storage battery

8.2.1 Add Bleeder Resistor

When the rotary actuator is powered on with a 48V switching power supply, the working circuit with adding bleeder resistor can be simplified and equivalent to Figure 8-2a and Figure 8-2b.

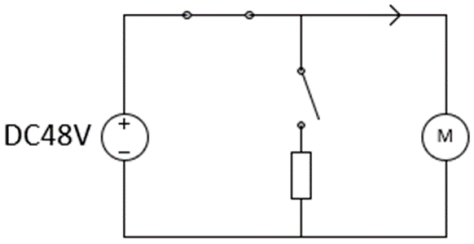

(a) Resistor is Disconnected when V_{DC}<51V

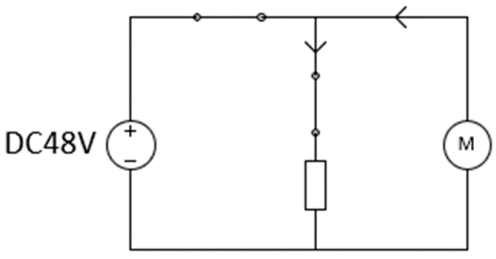

(b) Resistor is Connected when V_{DC}>53V

Figure 8-2 Bleeder Resistor Circuit Illustration

The function of adding bleeder resistor is that when the circuit loop is in kinetic energy recovery processing, the excess energy is dissipated through the resistor, thereby avoiding the power supply voltage spike in the process of the kinetic energy feedback. However, the bleeder resistor cannot be connected to the circuit for a long time, otherwise more heat will be generated continually, resulting in device damage, circuit failure or unnecessary current consumption. Therefore, it is recommended to design a reliable control logic of connecting bleeder resistor . For example, when setting the permissible maximum bus voltage setting value of the drive to

55V and the permissible minimum bus voltage setting value to 44V, the control logic can connect the bleeder resistor when V_{DC}>53V (as shown in Figure 8-2b, the excess power is dissipated through the resistor at this time), and disconnect it when V_{DC}<51V (as shown in Figure 8-2a, the power supply only outputs power to the motor at this time).

8.2.2 Add Super Capacitor

The super capacitor with large capacitance and fast charging characteristics can be used to absorb and recover kinetic energy. The working circuit can be simplified and equivalent to Figure 8-3a and Figure 8-3b.

As shown in Figure 8-3a, switching power supply and the super capacitor supply power to the load (motor) and output electric energy at the same time when it works normally. As shown in Figure 8-3b, kinetic energy is converted into electric energy feedback and the super capacitor quickly charges to recover part of the kinetic energy when the load is decelerating, thereby avoiding quick supply voltage spike and realizing the effect of the supply voltage fluctuating within the range of safe voltage.

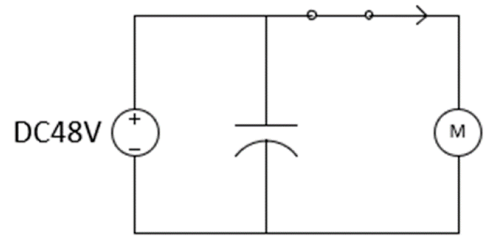

(a) Super Capacitor is Discharging

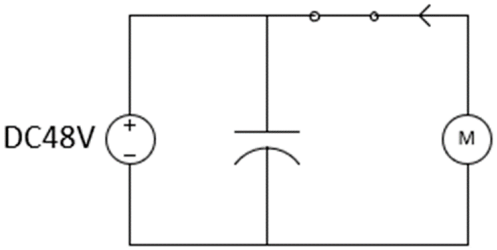

(b) Super Capacitor is Charging

Figure 8-3 Super Capacitor Circuit Illustration

8.2.3 Add Storage Battery

Storage battery is used to charge and absorb kinetic energy recovery, whose circuit can be simplified and equivalent to Figure 8-4a and Figure 8-4b.

Similar to the principle of super capacitors, switching power supply and storage battery can supply power to the load (motor) and output electric energy at the same time (as shown in Figure 8-4a) when it works normally. As shown in Figure 8-4b, the kinetic energy is converted into electric energy feedback, and the kinetic energy is recovered by charging the storage battery when the load is decelerating.

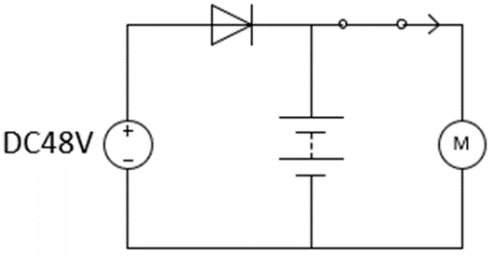

(a) Switching Power Supply add Storage Battery

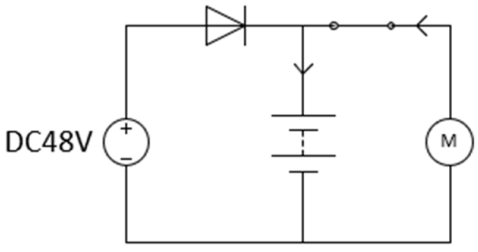

(b) Storage Battery Charges

Figure 8-4 Storage Battery Circuit Illustration

Chapter 9 Encoder and Position Feedback

Software applicability: The eTuner monitoring, encoder-reset, mechanical-zero and position-protection procedures remain applicable to eTuner. For eTunerII, see Section D.5. Position definitions, mechanical conditions and firmware requirements remain in force.

9.1 Encoder Resolution and Single-Turn Position Feedback

The rotary actuator is equipped with two absolute encoders to achieve dual loop position control, including a single-turn absolute encoder for motor with 17-bit resolution and a single-turn absolute encoder for output shaft with 19-bit resolution. (The multi-turn resolution of rotary actuator with multi-turn function is 16 bit)

Encoder resolution refers to the position number outputted by one rotation of the rotary actuator. For example, the encoder resolution of the output shaft is 19 bit, that is, the position number outputted by one rotation of the shaft is 2^{19}; The single-turn position feedback of 19-bit resolution is 0~524287, which will jump from 0 to 524287 if the actuator moves in the opposite direction at the 0 position. On the contrary, the position feedback will jump from 524287 to 0 if the actuator moves in the positive direction at the 524287 position.

Calculation Example
Calculate the encoder position corresponding to the single-turn angle(19 bit), if the position angle is 20°:

$$P_{encoder} = \frac{\theta}{360} \times 524288 \qquad (9.1)$$

$$P_{encoder} = \frac{20^{\circ}}{360} \times 524288$$

$$P_{encoder} = 29127$$

Symbol	Definition	Unit
$P_{encoder}$	Encoder position.	counts
θ	Position angle.	degree

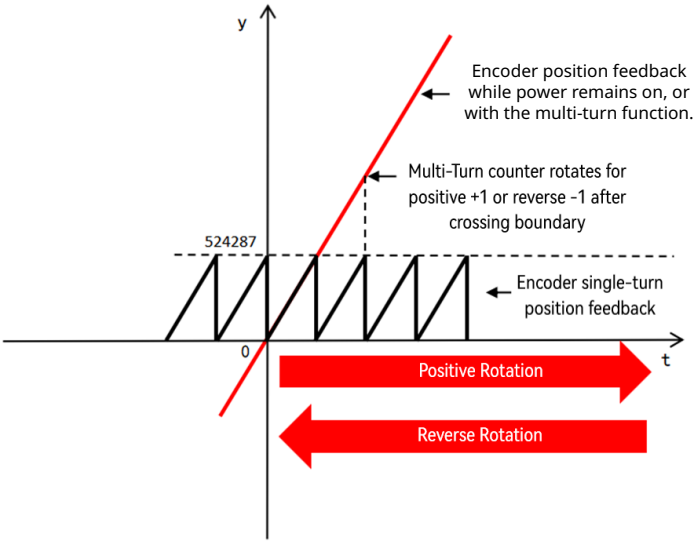

Figure 9-1 Position Feedback

9.2 Position Feedback of Rotary Actuator

When the encoder single-turn position jumps at the boundary position, the rotary actuator will count the multi-turn turns. As shown in Figure 9-1, the encoder boundary positions with 19-bit resolution are 0 and 524287; The position feedback will jump from 524287 to 0 if it rotates in the positive direction, and the multi-turn turns +1; On the contrary, the position feedback will jump from 0 to 524287 if it rotates in the opposite direction, the multi-turn turns -1.

The current position calculation formula:

$$P_c = N \times resolution + P_s \tag{9.2}$$

Symbol	Definition	Unit
P_c	Current encoder position	count
N	The amount of rotation	N/A
P_s	Single-turn encoder position	count

Rotary Actuator Position Feedback Acquisition:

(1) Read object index 6064h (actual position, unit: pulse) via EtherCAT or CANopen bus. According to the above position calculation formula, it can be seen that:

$$6064h\ value = N \times resolution + P_s \tag{9.3}$$

Symbol	Definition	Unit
N	The amount of rotation	N/A
P_s	Single-turn encoder position	count

(2) In eTuner, read the position feedback of rotary actuator via the "Position" displayed in the "Monitor" interface; the output-side single-turn position feedback corresponds to the "Load Encoder" displayed in the "Encoder" interface, as shown in Figure 9-2a and Figure 9-2b.

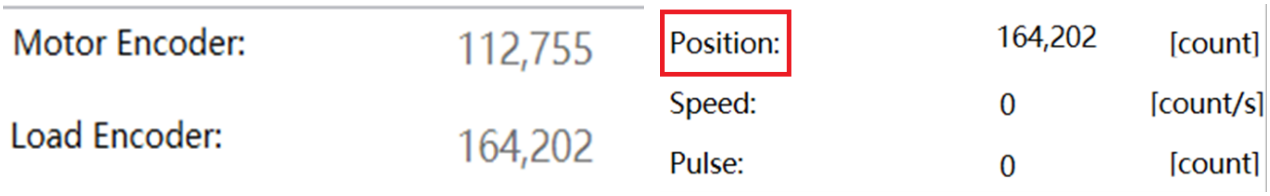

(a) Encoder (b) Position

Figure 9-2 The eTuner Reads the Position Feedback

eTunerII: Reading Position Feedback

In Status monitor, read Position and Load encoder position. The two signals are not interchangeable and must not be treated directly as angles. See Section D.5 for encoder configuration and reset behavior, and bundled help section 10 for Status and fault diagnosis.

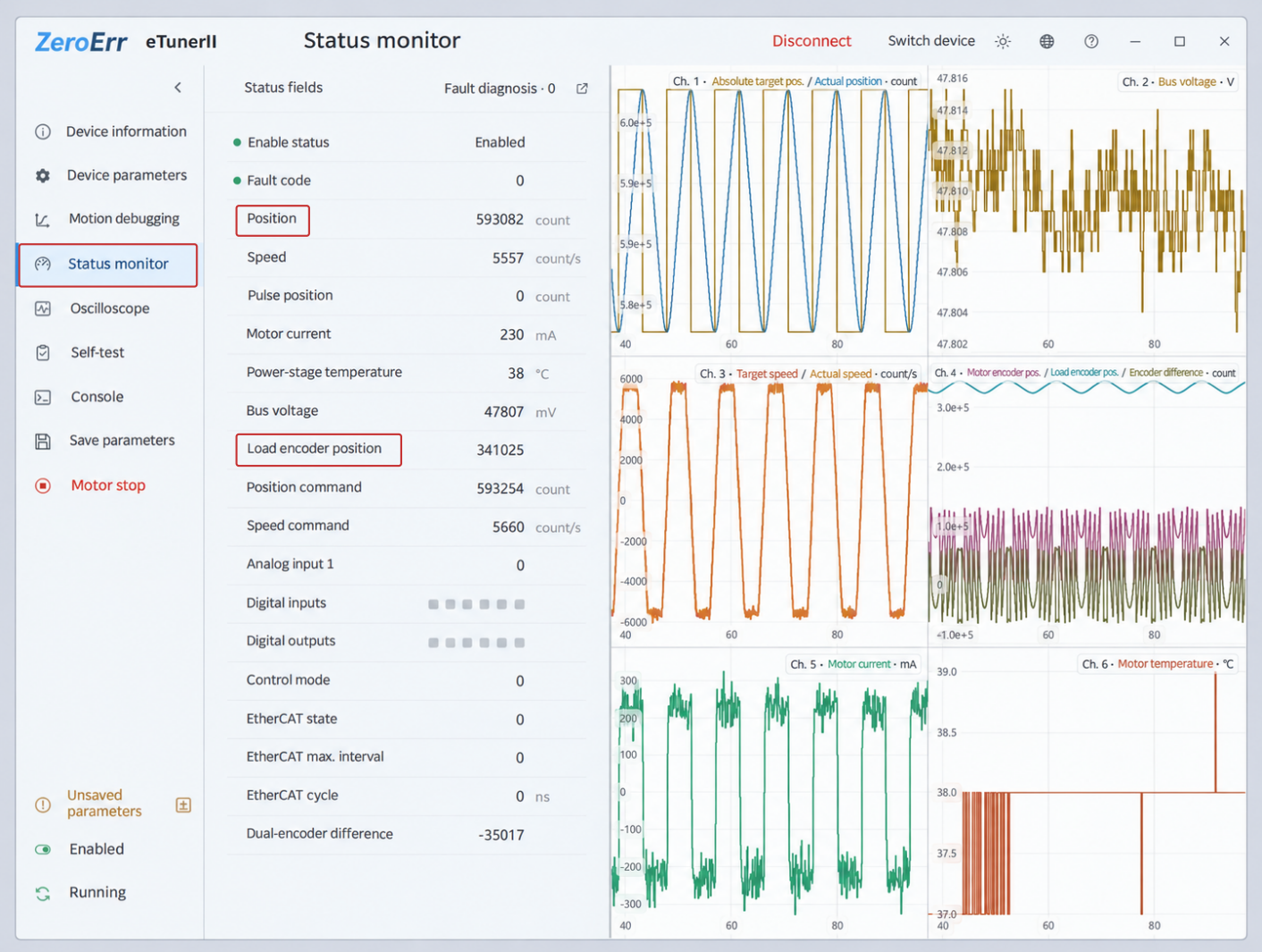

Figure 9-2A eTunerII Status monitor (light theme)

Displayed values, states, waveforms and test results are examples, not recommended settings or acceptance criteria.

9.3 Position and Cautions of Rotary Actuator with Single-Turn Function

Adjust the output shaft position of reducer before installation of rotary actuator equipped with single-turn encoder to ensure no overshoot of output single-turn encoder boundary position (0 and 524287) within the operation range. Otherwise, the multi-turn count will be lost after powering off and restarting to operate, then the actuator position feedback will become the output encoder single-turn position.

9.4 Position and Cautions of Rotary Actuator with Multi-Turn Function

The rotary actuators with multi-turn encoder do not need to adjust the output shaft position of reducer to match the mechanical zero position before installation. Note that the 3.6V multi-turn power supply battery needs to be installed before using the multi-turn rotary actuator, and then click "Reset Load Encoder" in "Encoder" interface to clear the multi-turn battery errors (The operation method is shown in Figure 9-3). If you intend to use the multi-turn eRob module as a single-turn model (i.e., not connected to the 3.6V multi-turn power supply battery), please be aware that the multi-turn module will generate an error upon each power-off and restart. To resolve this issue, users can clear the error by writing 0x80 to the control word (address 6040h) and then enable the eRob module. During operation, please ensure that the device operates within the single-turn range and does not surpass the boundaries of the output-side single-turn encoder (0 and 524287). Failure to comply may result in the loss of multi-turn counting after a power-off restart, causing the position feedback to revert to the single-turn encoder's position at the output side.

NOTE:

(1) The multi-turn eRob should be equipped with a battery during the first use, then click "Reset Load Encoder" to clear multi-turn error reports.

(2) If encoder battery alarms occur during operation, click "Reset Load Encoder" to clear multi-turn error reports after troubleshooting.

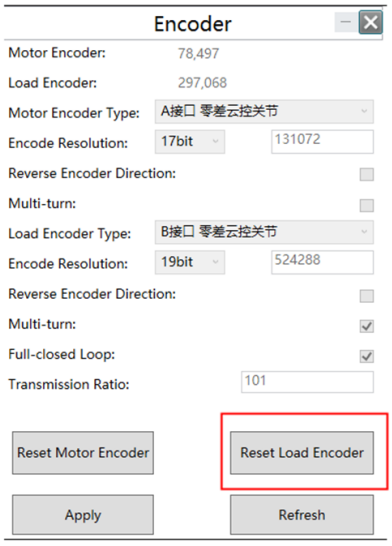

Figure 9-3 Load Encoder Reset Operation

9.5 Instruction of Zero Position Calibration Function

9.5.1 Zero Position Calibration Function of Single-Turn Rotary Actuator

Due to the installation method, when the single-turn rotary actuator operates with the zero position defined by the user and reaches the maximum motion range, the position feedback value may exceed the boundary value (0 or 524287). The user can set the zero position to 262144 by using zero position calibration function thereby ensuring the maximum motion range of the single-turn eRob rotary actuator is –175°~175° and the position feedback value is within the single-turn position range as shown in Figure 9-4.

Connect eTuner, make the eRob move to the zero position defined by the user. Refer to Chapter 15 for detailed steps. The flow diagram for zero position calibration of single-turn eRob is as shown in Figure 9-5.

The steps for using zero position calibration function of single-turn eRob are as shown in Figure 9-6. When the save command is completed, power off and restart. Open the “Zero point” interface, when current “Position” value is 262144, the setting is successful.

NOTE: Mechanical zero calibration function of single-turn eRob in eTuner Setup Support Software V13.72 should match firmware of X3071220X or above.

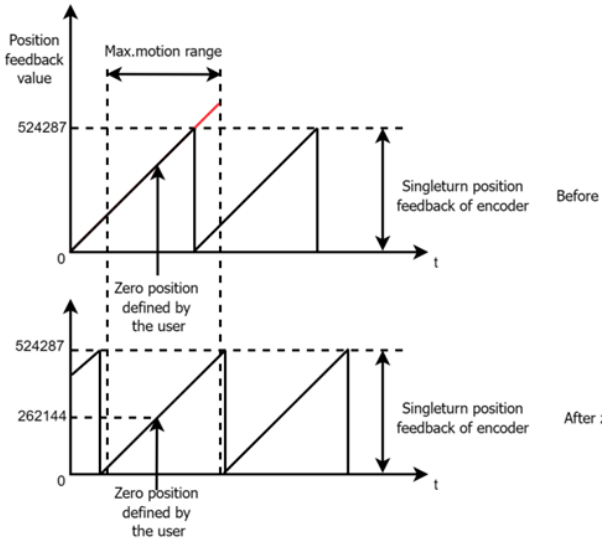

Figure 9-4 Comparison Figures of Before/After Zero Position Calibration of Single-Turn eRob

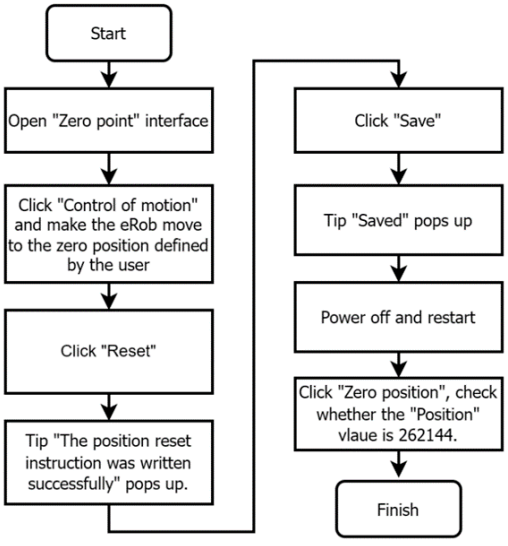

Figure 9-5 Flow Diagram of Zero Position Calibration of Single-Turn eRob

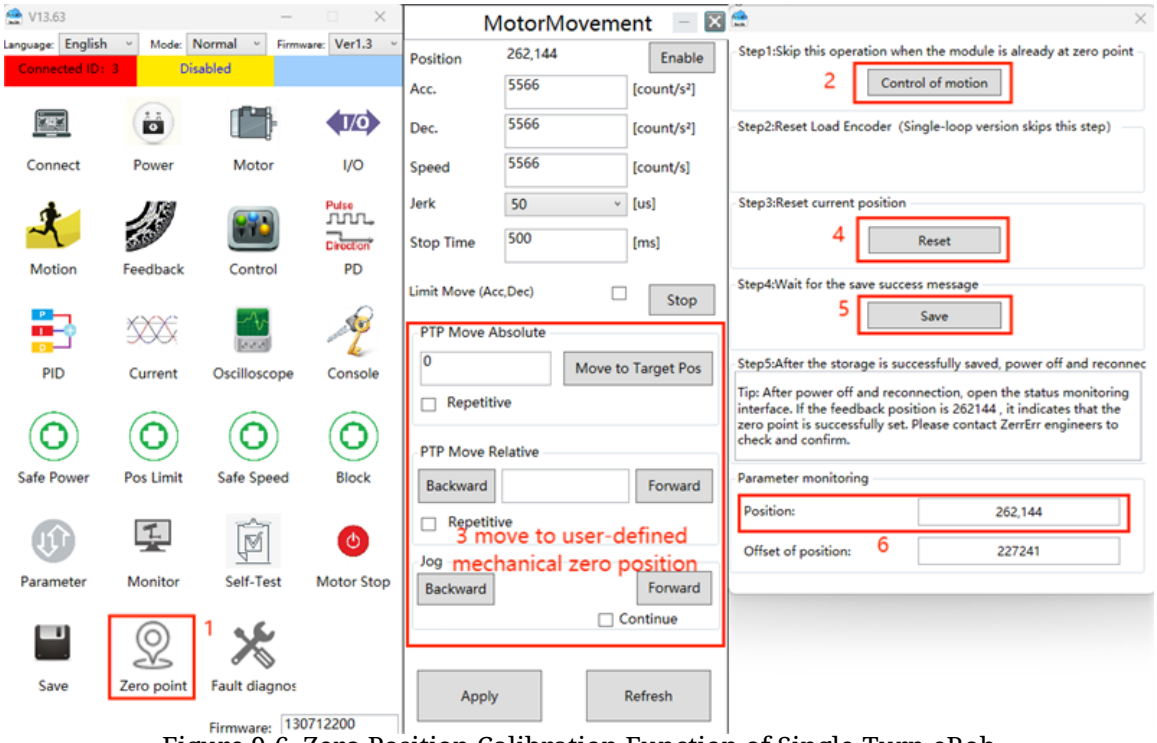

Figure 9-6 Zero Position Calibration Function of Single-Turn eRob

9.5.2 Zero Position Calibration Function of Multi-Turn Rotary Actuator

The multi-turn eRob user can use zero position calibration function to set the zero position (0~524287) flexibly according to the actual situation. The default zero position value is 262144, as shown in Figure 9-7.

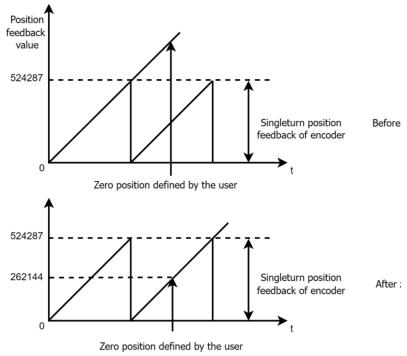

Figure 9-7 Comparison Figures of Before/After Zero Position Calibration of Multi-Turn eRob

Connect eTuner and make the eRob move to the zero position set by the user. Refer to Chapter 15 for detailed steps.The flow diagram for zero position calibration of multi-turn eRob is as shown in Figure 9-8a.

The steps for using zero position calibration function of multi-turn eRob are as shown in Figure 9-8b. When the save command is completed, power off and restart. Open the “Zero point” interface, when the setting value is displayed in current “Position” , the setting is successful.

NOTE: Mechanical zero calibration function of multi-turn eRob in eTuner Setup Support Software V13.72 should match firmware of X3071220X or above.

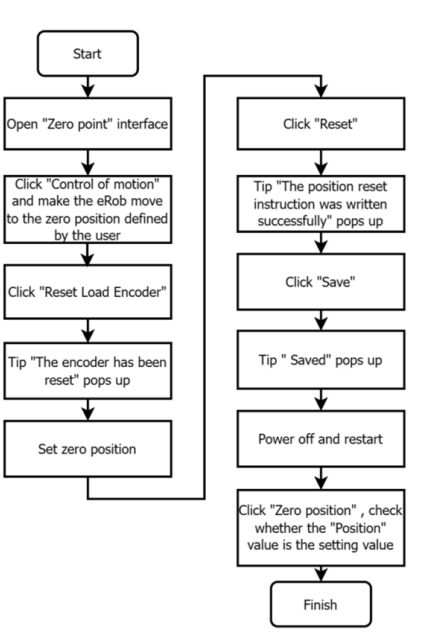

(a) Flow Diagram for Zero Position Calibration of Multi-Turn eRob

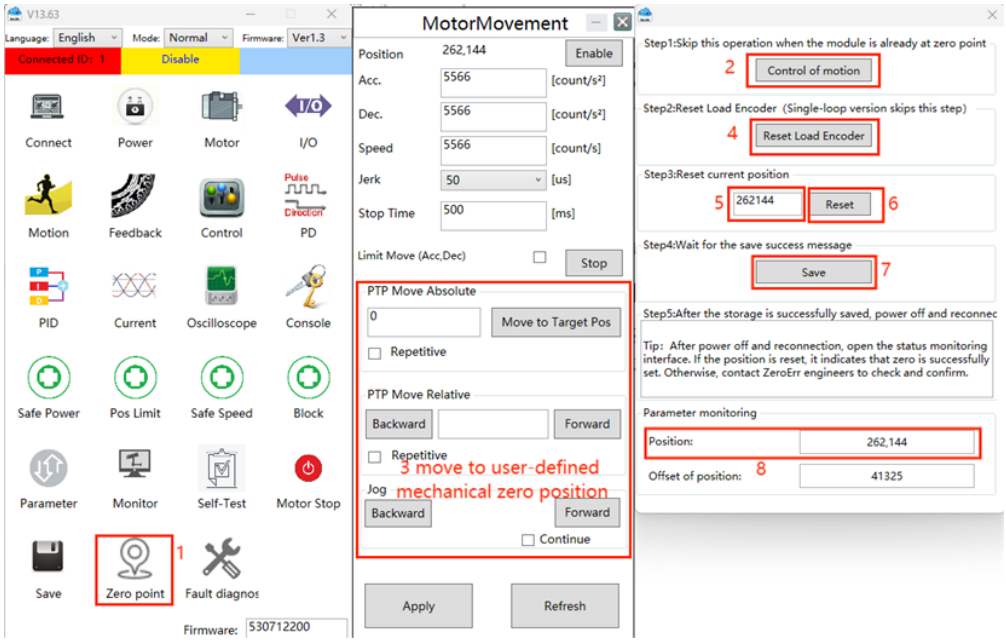

(b) Zero Position Calibration Function of Multiturn eRob

Figure 9-8 Zero Position Calibration

9.6 Instruction of Position Protection Function

The rotary actuators are configured with the default parameters of position protection as shown in Figure 9-9a. The user can use the “Pos Limit” function to limit the actual motion range of the eRob, preventing the eRob from operating beyond the actual permissible maximum motion range which may cause device collision or the wire connection damage between rotary actuators.

For example: the operation range is ±15°, the encoder position corresponding to the mechanical zero position (0°) is 262144, that is ,

Lower limit set value: 262144 - 21846 = 240298

Upper limit set value: 262144 + 21846 = 283990

Setting method via eTuner is as shown in Figure 9-9b. Open the “Set Position” interface, set “Position Limit” from (lower limit set value) to (upper limit set value); then click “Apply” and “Save”.
Position protection parameters can also be set via EtherCAT or CANopen bus. The object index of the position limit protection parameter is “$607D_h$”. Write the lower-limit setting value to “$607D_h$:01_h” and the upper-limit setting value to “$607D_h$:02_h”, and then write the save command “65766173_h” to “1010_h:01_h”. Writing any other value is invalid and the readback value is “0”; a readback value of “1” indicates that saving is in progress, and a readback value of “2” indicates that saving is complete.
After the parameters are set as described above, the position limits take effect immediately. Bit 11 of the Statusword object (“6041_h”) indicates whether the rotary actuator has reached or exceeded a position limit. For details, refer to Section 5.4.1, “Statusword”, in the *eRob CANopen and EtherCAT User Manual*. The effects of the position limits in different operating modes are shown in the following table.

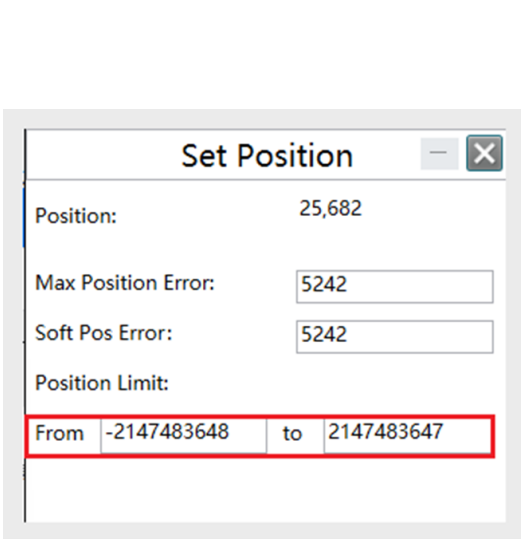

(a) The Default Parameter of Position Protection

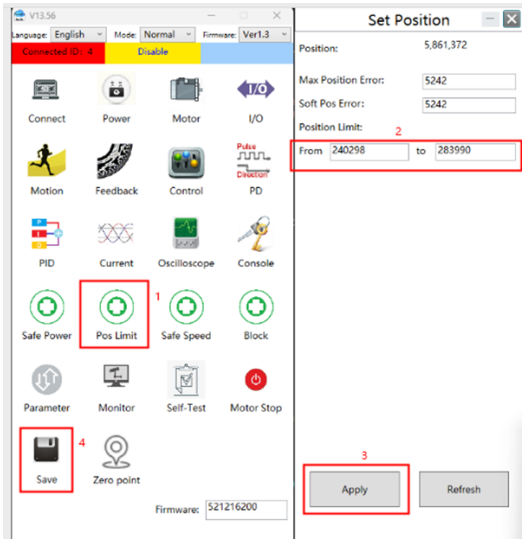

(b) Set Position Protection

Figure 9-9 Position Protection Settings

Table 9-1 The effects of position limitations in different operating modes

6060_h Set Value	Operation Mode	Position Limit Effect
0x01	Profile Position Mode	If the target position ($607A_h$) sent by the master station controller exceeds the position limit, the driver will use the limit position as the internal target position for motion trajectory planning. It will decelerate to 0 at the profile deceleration rate (6084_h) before reaching the limit and stop at the limit position, continuously outputting position-holding torque. At this time, the driver will only execute target position ($607A_h$) commands within the position limit range.
0x04	Profile Torque Mode	When the actual position (6064_h) reaches or exceeds the position limit, the driver immediately shuts off the power to the motor, but the brake does not engage. At this point, both the motor actual current (6078_h) and the torque actual value (6077_h) become zero, and no position holding torque is outputted. It is important to note that the eRob module remains enabled during this time, and it may continue to move due to inertia and gravity acting on the load. In this situation, the driver will only execute target torque (6071_h) commands that move the eRob module in the direction within the position limit range.
0x08	Cyclic Synchronous Position Mode	When the position actual value (6064_h) reaches or exceeds the position limit, the driver will rapidly decelerate and come to a stop, return to the limit position and continuously outputting position holding torque. During this time, the driver will only execute target position ($607A_h$) commands within the range of the position limit.
0x0A	Cyclic Synchronous Torque Mode	When the actual position (6064_h) reaches or exceeds the position limit, the driver will immediately cut off the power to the motor, but the brake will not engage. As a result, both the motor actual current (6078_h) and the torque actual value (6077_h) will be set to zero, and no position holding torque will be outputted. It is important to note that during this time, the joint remains in the enabled state, and it may continue to move due to inertia and gravity acting on the load. In such cases, the driver will only execute target torque (6071_h) commands that move the joint in the direction towards the position limit range.

Chapter 10 Multi-Turn Power Supply Battery Instruction

Software applicability: The referenced encoder-reset interface is eTuner. For eTunerII Reset load encoder, see Section D.5. Reconfirm the device zero after either procedure.

10.1 Function of Battery

When the rotary actuator with multi-turn is powered off, it provides working power for the load multi-turn encoder to count the multi-turn position value and avoid rotary actuators and other devices losing zero position.

10.2 Cautions on Battery Usage

Cautions on multi-turn power supply battery usage:

(1) Do not change the wiring sequence of the original battery, and do not vigorously pull the battery wires;
(2) Do not use wires or other conductive media to directly connect to the positive and negative terminals of the battery;
(3) The wiring terminal of the original battery is only suitable for the multi-turn power supply battery interface of rotary actuators in our company. Pay attention to the correct connecting direction. Fix the battery to prevent the terminals from being pulled and shaken after insertion;
(4) Reset the load encoder after the first installation of the battery or replacement of a new battery (the reset operation method is shown in Section 9.4). When replacing the battery, do not pull out the connector terminal directly. Pull the terminal front end snaps to release the buckle, and then gently pull it out.

Note: More details for safety cautions, please refer to Appendix A.

10.3 Multi-Turn Battery Current and Maintenance

At 25°C and an initial battery voltage of 3.67V, the measured battery current for one multi-turn rotary actuator was 4μA with the 48V main supply disconnected and 0μA with the main supply connected. Figure 10-1 shows the battery discharge characteristics at 25°C.
Insufficient battery voltage can affect multi-turn position retention. For battery-related alarms, follow Section 10.4. Battery replacement and load-encoder reset requirements are provided in Sections 10.2 and 9.4. Do not use the discharge curves as a fixed replacement interval.

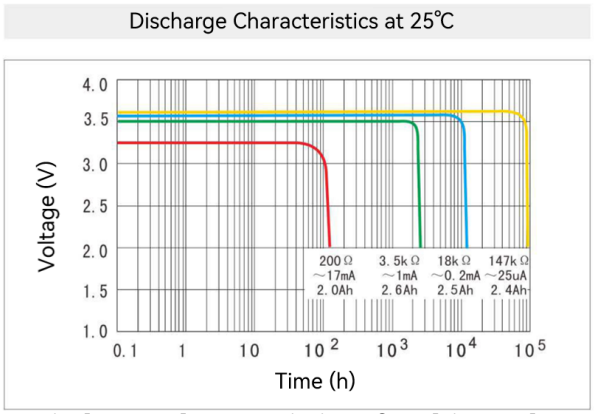

Figure 10-1 Discharge Characteristics of multi-turn battery at 25°C

10.4 Battery Related Errors Handling

Refer to Table 10-1 for the battery related errors handling.

Table 10-1 Query Table for Battery Related Errors Handling

Error Codes Reported by 0x603F	Messages	Direct Causes	Possible Causes	Troubleshooting
0x730D	Battery Warning Error*1	Load-encoder multi-turn battery voltage remains below the warning voltage of 3.15V.	1. The battery is normally consumed to low voltage warning. 2. Use wrong battery. 3. Abnormal battery circuit leads to fast consumption.	1. Replace batteries with new ones and perform correct reset operation*2. 2. Replace batteries with correct ones and perform correct reset operation. 3. Check cables, replace batteries with new ones and perform correct reset operation.
0x730F	Battery Voltage is Too Low	Load-encoder multi-turn battery voltage remains below the working voltage of 3.05V.	1. After the battery is consumed to trigger the low voltage warning, continue consuming to trigger the voltage warning error. 2. Use a wrong battery. 3. The battery circuit is in poor contact. 4. The battery is not connected.	1. Replace batteries with correct ones and perform the correct reset operation. 2. Replace the correct batteries and perform the correct reset operation. 3. Check cables, replace batteries with new ones and perform correct reset operation. 4. Install the batteries and perform a correct reset operation.
0x7314	Power-Off Status Detected	The load-encoder battery has been replaced while its voltage remains above the working voltage of 3.05V.	1. The load-encoder battery has been replaced. 2. Load encoder battery wiring is too loose.	1. Perform correct reset operation. 2. Check load encoder wiring and perform correct reset operation.
0x7374	Multi-Turn Position Error			

***1** Multi-turn data will not be lost when the rotary actuator reports a battery warning error.

***2** The correct reset procedure is described in Section 9.4. Connect to eTuner, open the "Encoder" interface and click "Reset Load Encoder". Then reconfirm the equipment zero position.

Chapter 11 Multi-Turn Encoder Battery Under-Voltage Warning

Status instruction:

(1) Battery status: "0" indicates the battery power supply voltage of the encoder is lower than 3.05V, "1" indicates the battery voltage of the encoder is normally powered, and "×" means arbitrary state.

(2) 48V status: "0" indicates the rotary actuator is not supplied power with 48V, and "1" indicates the rotary actuator is supplied power with 48V.

11.1 The Status when 48V Power Supply Switch from OFF to ON (0 -> 1)

Case 1: Description: In the previous state, there were no reported errors, and the module started up without any issues. During the current startup, there are no error reports from CAN and EtherCAT, indicating a smooth and error-free initialization process.

	Previous Status	Startup
Battery	1	1
48V	0	0 → 1
Status	OK	OK

Case 2: Description: Under the condition that the previous status was in arbitrary status, when the actuator was started, the battery was dead. The CAN and EtherCAT are started this time with reporting multi-turn power failure alarm error, the multi-turn is lost, but the servo drive can be enabled.

	Previous Status	Startup
Battery	×	0
48V	0	0 → 1
Status	×	NG

Case 3: Description: Under the condition that there were no error reports in previous status, pull out the battery with 8 seconds (the capacitor discharge takes time, which can be quickly discharged by both terminals of short-circuiting) and then insert the battery back before the actuator starts. CAN and EtherCAT are started with reporting "multi-turn power-off alarm" this time, then the multi-turn is lost, but the servo drive can be enabled.

	Previous Status	Before Startup	Startup
Battery	1	1 → 0 → 1	1
48V	0	0	0 → 1
Status	OK	OK	NG

11.2 The Status When the 48V Power Supply Has Been Activated (1)

Case 1: Description: If the current status is normal, no error will be reported under arbitrary status when operating. CAN and EtherCAT will not report errors, the multi-turn value will not be lost.

	Current Status	Startup Status
Battery	1	×
48V	1	1
Status	OK	OK

11.3 Status During a 48V Power Cycle (ON–OFF–ON)

Case 1: Description: If the current status is normal at startup, and the battery voltage drops below 3.05V under startup condition, CAN and EtherCAT will not report any errors, and the multi-turn value will not be lost. When the rotary actuator restarts, CAN and EtherCAT will report "multi-turn power-off alarm", and the multi-turn will be lost, but the servo drive can be enabled.

	Current Status	Startup Status	Restart the Rotary Actuator
Battery	1	1 → 0	0
48V	1	1	1 → 0 → 1
Status	OK	OK	NG

Case 2: Description: If the current status is normal at startup, and the battery voltage drops below 3.05V under startup condition, CAN and EtherCAT will not report any errors, and the multi-turn value will not be lost. When the rotary actuator restarts, CAN and EtherCAT will report the "multi-turn battery with low voltage" error, and the multi-turn is lost, but the servo drive can be enabled.

	Current Status	Startup Status	Restart the Rotary Actuator
Battery	1	1 → 0 → 1	1
48V	1	1	1 → 0 → 1
Status	OK	OK	NG

Chapter 12 Strain Wave Gear Analysis

12.1 Gear Ratio Analysis

12.1.1 Output Rotational Speed Calculation

Motor rotation is transmitted to the actuator output through the gear reducer. The output speed (n_o) is calculated from the motor speed (n_m) using the gear ratio (m_G). The formula is:

$$n_o = \frac{n_m}{(m_G + 1)} \tag{12.1}$$

Symbol	Definition	Unit
n_o	SWG output rotational speed	RPM
n_m	motor / SWG input rotational speed	RPM
m_G	SWG gear ratio*	N/A

* The reason why dividing by $(m_G + 1)$ is related to the gear installation method, that is, the input is wave generator; the output is circular spline; and the fixation of installation is flexspline.

12.1.2 About Speed Setting and Angular Velocity Conversion

Software applicability: Figure 12-1 shows eTuner. In eTunerII, use Motion debugging → Parameter command; see Section D.6. The formulas depend on the specified encoder configuration; changing software does not change that resolution.

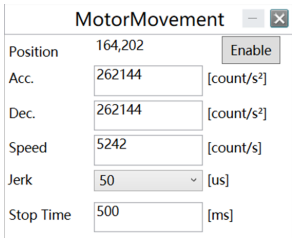

Figure 12-1 Speed Setting Interface

There are two encoders in a rotary actuator, encoder for motor (17 bit) and encoder for output shaft (19 bit). The rotary actuator runs with dual loop position control, so the way to set the operating speed is setting the output rotational speed directly. The speed feedback is the rotational speed feedback of the output. As shown in Figure 12-1.

(1) The conversion formula between eRob rotational speed (n_c) (unit: count/s) and rotational speed (n_{RPM}) (unit: RPM): (524288 is the resolution of 19-bit encoder in the output shaft)

$$n_{RPM} = \frac{n_c}{524288} \times 60 \tag{12.2}$$

Symbol	Definition	Unit
n_{RPM}	output rotational speed	RPM
n_c	output rotational speed	counts/s

(2) The conversion formula between eRob rotational speed (n_c) (unit: count/s) and angular velocity (ω_θ) (unit: °/s):

$$\omega_\theta = \frac{n_c}{524288} \times 360 \tag{12.3}$$

Symbol	Definition	Unit
ω_θ	output angular velocity	$^\circ/s$
n_c	output rotational speed	counts/s

(3) The conversion formula between eRob rotational speed (n_c) (unit: count/s) and angular velocity (ω_{rad}) (unit: rad/s):

$$\omega_{rad} = \frac{n_c}{524288} \times 2\pi \tag{12.4}$$

Symbol	Definition	Unit
ω_{rad}	output angular velocity	rad/s
n_c	output rotational speed	counts/s

(4) Set angular acceleration/deceleration (α): It is recommended to set the acceleration/deceleration time (t_a) ≥0.3s. The acceleration time is the required time for the eRob to reach the target speed from 0. The deceleration time is the required time for the eRob to reach 0 from the target speed(ω_t). The relationship between ω_t and t_a:

$$\alpha = \frac{\omega_t}{t_a} \tag{12.5}$$

Symbol	Definition	Unit
α	angular acceleration/deceleration	$^\circ/s^2$, rad/s^2
ω_t	target speed (angular velocity)	$^\circ/s$, rad/s
t_a	acceleration/deceleration time	second

(5) The max. rotational speed for each series code of eRob is as shown in Table 12-1.

Table 12-1 Max. Rotational Speed of Each Series Code of eRob

Series Code	Gear Ratio m_G	Max. Output Rotational Speed n_c (counts/s)	Max. Output Rotational Speed n_{RPM} (RPM)	Max. Output Angular Velocity ω_θ (°/s)	Recommended Acc. / Dec. Time t_a (seconds)
eRob70F	50	524288	60	360	≥0.3
	80 (V3)	327680	37.5	225	≥0.3
	100	262144	30	180	≥0.3
eRob70H	50	524288	60	360	≥0.3
	80	327680	37.5	225	≥0.3
	100	262144	30	180	≥0.3
	120	218453	25	150	≥0.3
eRob80F	50	524288	60	360	≥0.3
	100	262144	30	180	≥0.3
eRob80H	50	524288	60	360	≥0.3
	80	327680	37.5	225	≥0.3
	100	262144	30	180	≥0.3
	120	218453	25	150	≥0.3
eRob90H	50	524288	60	360	≥0.3
	80	327680	37.5	225	≥0.3
	100	262144	30	180	≥0.3
	120	218453	25	150	≥0.3
eRob110H	50	524288	60	360	≥0.3
	80	327680	37.5	225	≥0.3
	100	262144	30	180	≥0.3
	120	218453	25	150	≥0.3
	160	163840	18.75	112.5	≥0.3
eRob142H	50	349525	40	240	≥0.3
	80	218453	25	150	≥0.3
	100	174763	20	120	≥0.3
	120	145927	16.7	100.2	≥0.3
	160	109227	12.5	75	≥0.3
eRob170H	50	349525	40	240	≥0.3
	80	218453	25	150	≥0.3
	100	174763	20	120	≥0.3
	120	145927	16.7	100.2	≥0.3
	160	109227	12.5	75	≥0.3

Chapter 13 eTuner Setup Support Software Connection

Software applicability: The driver, connection steps and screenshots in this chapter describe eTuner, with V13.72 as an example. For eTunerII connection, saving and the workbench, see Chapter 14; for functional differences, see Appendix D. The wiring requirements are shared.



Figure 13-1 eRob to PC Connector Interface

Step 1: Wiring the eRob to PC Connector, do not connect PE, connect L to CAN_L, connect G to GND, connect H to CAN_H, switch 1 or 2 to ON in R DIP switch, and do not move the other one, then connect the “Connector” to the rotary actuator. As shown in Figure 13-1.

NOTES: For more details regarding the functionality and operation guide please refer to the “eRob to PC Connector User Manual”

Step 2: Install “USBCANWDM.INF”. Download the latest eTuner Setup Support Software in ZeroErr official website, unzip the compressed package and open eTuner_ V13.72 \ Driver _installation.
Then double click the DriveSetup program to install the driver (as shown in Figure 13-2a).

Step 3: Open the software and follow the steps below to connect the actuator as shown in Figure 13-2b.

(1) Click “Connect” to open “Connection Settings” interface.
(2) Click “Scanning” to test, wait for scanning to finish.
(3) Click “Add List”.
(4) Click the device that has been added.
(5) Click “Connect”.
(6) Confirm successful connection and the displayed CAN ID and parameters.

Note: If the device is already in the list, repeat only items 4, 5 and 6 of Step 3.

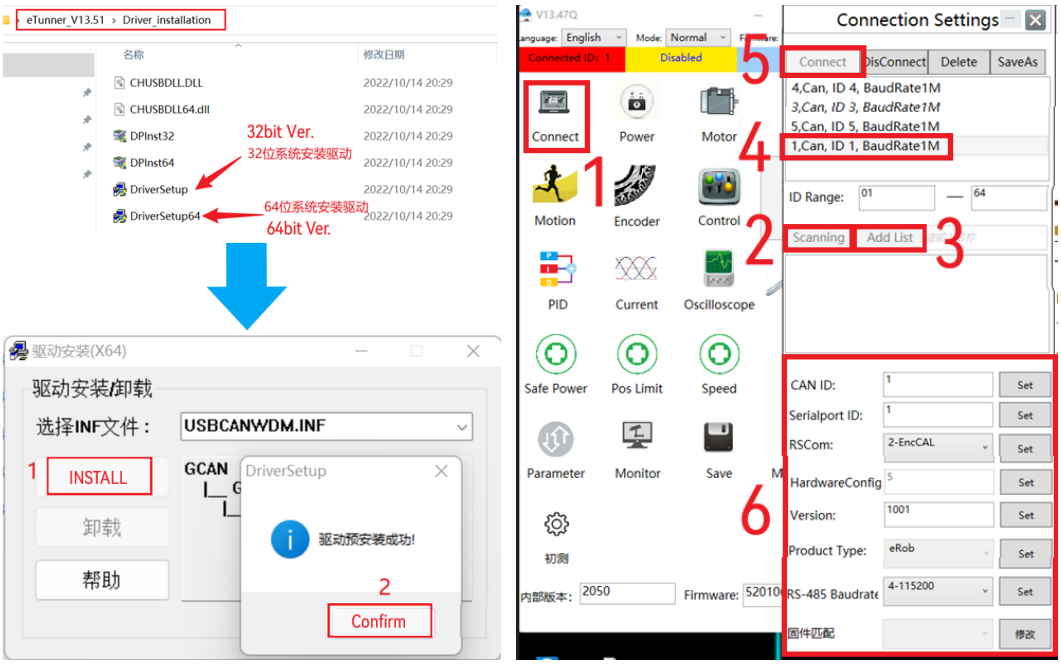

(a) “Connector” Driver Installation (b) Actuator Connection Steps

Figure 13-2 PC Connection and Debugging

Chapter 14 eTunerII Setup Support Software (New Version)

14.1 Scope and Bundled Help

This chapter introduces eTunerII connection, parameter saving, workbench navigation and common operations. For eTuner, follow Chapter 13 and the eTuner instructions in the relevant functional chapters. For eTunerII, start here and use the corresponding functional instructions and bundled help. The wiring, power supply, mechanical travel, load and firmware requirements in this manual continue to apply.

Open the help document from the eTunerII title bar, or open `help/index.html` in the software package with a browser. Keep the complete `help` folder and its `images` subfolder for offline use. The task index in Section 14.5 identifies the relevant help sections; Appendix D explains the necessary differences between the two applications.

Interface images are examples. Check the help supplied with the version in use. Do not assume that the two applications have identical functions, signals or parameter files.

14.2 Installation and Connection

Follow the wiring requirements in Chapters 6 and 13. In the eTunerII example, the USB-to-CAN driver is `drivers/erob/DriverSetup64.exe`. Keep the accompanying files in the same directory. This directory differs from the eTuner example.

Start `etuner2.exe`. On the device-selection page, expand Scan devices, select device type eRob and communication type CAN, and use Scan and add. Click the target device card to connect. In the workbench, check the model, firmware version and CAN ID under Device information.

Detailed operations and interface illustrations: eTunerII bundled help, section 01 and 02, Preparation and First connection.

14.3 Editing and Saving Parameters

Open the relevant group under Device parameters. After editing, review all pending changes in Parameter management and apply them. After successful application, select Save parameters in the main navigation and wait for confirmation that saving has succeeded.

Saving scope: Editing creates local drafts. Apply submits valid drafts from all groups; Save parameters writes them to device Flash. Editing an input box, or merely waiting about three seconds, does not confirm saving. Brake and encoder commands have separate requirements; see Section D.4 and Section D.5.

Detailed operations and interface illustrations: eTunerII bundled help, section 05, Editing and saving parameters.

14.4 Workbench Overview and Main Entries

Figure 14-1 shows the Status monitor workbench. The red boxes identify Device information (model, firmware and CAN ID), Device parameters (parameter groups), Motion debugging (trial motion and excitation), Oscilloscope (waveform capture), and Self-test (tests and records), from top to bottom.

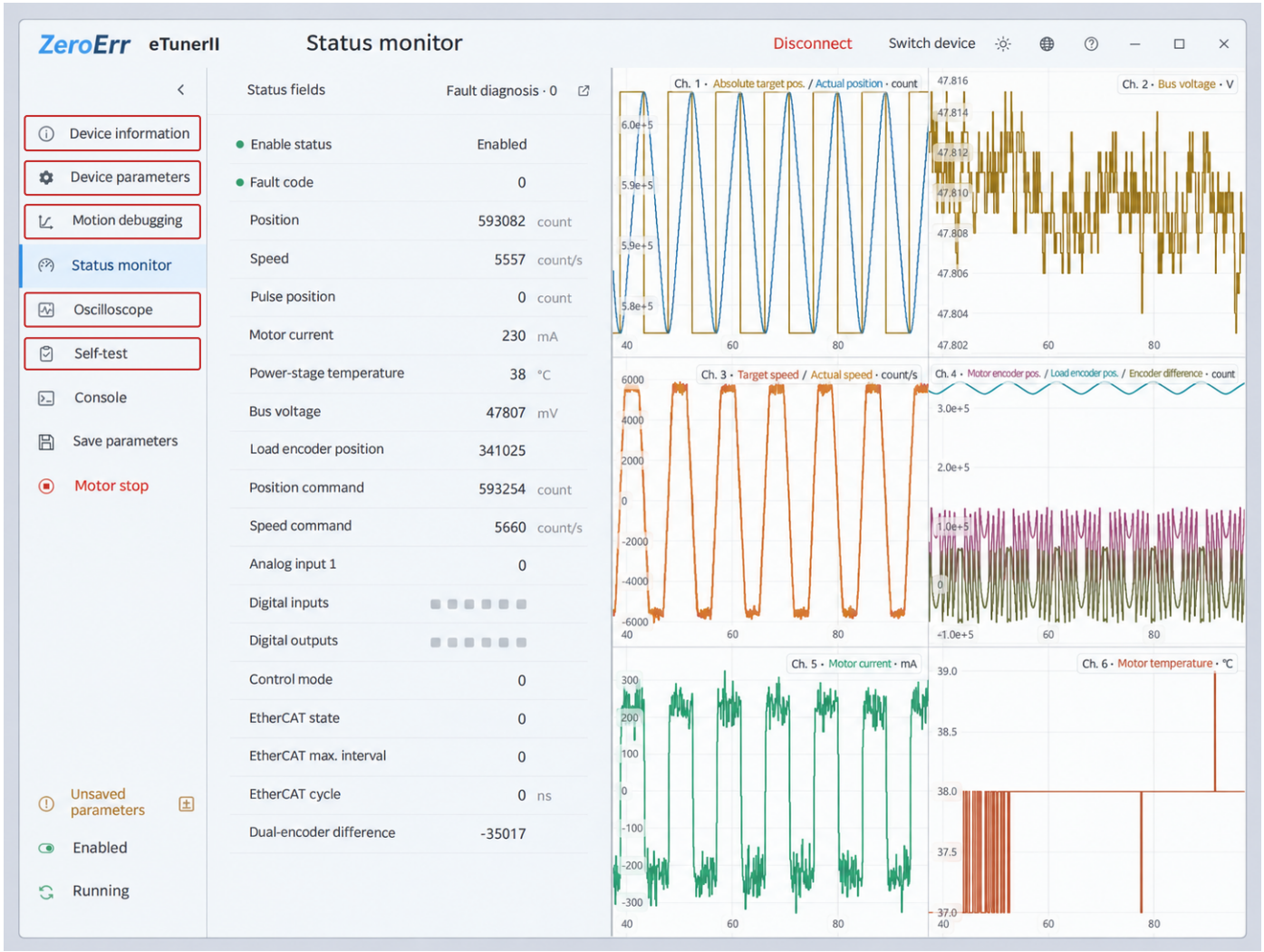

Figure 14-1 eTunerII workbench overview (Status monitor)

Displayed values, states, waveforms and test results are examples, not recommended settings or acceptance criteria.

For position feedback, see Section 9.2; for trial motion, see Section 15.1; for PID and waveform capture, see Section 16.4; for self-test, see Section 27.3. Use the task index below to find detailed help.

14.5 Common Tasks and Help Index

Check the product conditions in the relevant manual chapter before using the software help. Help-section numbers below refer to the help bundled with eTunerII.

Task	Bundled help	This manual
Preparation and connection	01 Preparation; 02 First connection	Section 14.2; Section D.2
Device information and CAN ID	04 Device information and CAN ID	Section 27.1; Section D.10
Parameter editing and saving	05 Editing and saving parameters	Section 14.3; Section D.3
Brake and encoder commands	05: brake release/engagement and encoder reset	Chapters 7 and 9; Section D.4 and Section D.5
Parameter-file import/export	06 Importing and exporting parameter files	Section D.12
Trial motion	07 Motion debugging	Section 15.1; Section D.6
PID, excitation and waveform capture	05 Editing and saving parameters; 07 Motion debugging; 09 Device recording and export	Section 16.4; Section D.7
Position, status and faults	10 Status and fault diagnosis	Chapters 9 and 27; Section D.5 and Section D.11
Self-test and test records	11 Self-test and test records	Section 27.3; Section D.11
Factory-parameter restore	12 Restoring factory parameters	Chapter 21; Section D.12
STO and pulse-direction control	05, 10 and the relevant parameter descriptions	Chapters 22 and 25; Section D.8 and Section D.9

14.6 Software Behaviors to Distinguish

- **Motion and stopping:** Stop motion does not itself disable the motor. See Section D.6 for stop controls, jogging and motion limits. The trial-run conditions in Chapter 15 continue to apply.
- **Signals and units:** Position-feedback signals are not interchangeable, and raw readings are not necessarily angles. Check the units for speed, acceleration, deceleration and sampling intervals; see Section D.5–D.7.
- **Parameters and records:** Saving to device Flash is different from exporting a file to the computer. Do not assume eTuner files are compatible with eTunerII. See Section D.12 for export scope and Section D.11 for test records and fault evidence.

Chapter 15 Trial Run for Rotary Actuator

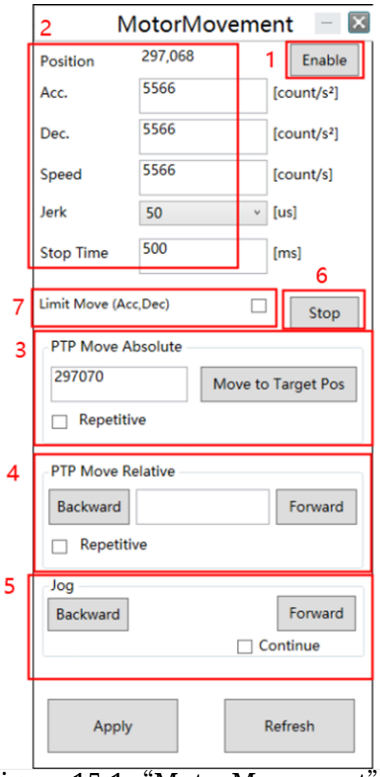

Figure 15-1 "MotorMovement" Interface

Interface Introduction:

1. Click "Enable". The motor is enabled, and the brake is released automatically.
2. The current "Position" value is displayed and set the "Speed" which takes the encoder resolution as the unit. The "Jerk" is the time for the eRob achieves the set acceleration from 0 (The larger the setting value, the closer to the S-type speed curve; the smaller the setting value, the closer to the T-type speed). The default setting is 50us. The "Stop Time" is the dwell time when setting point-to-point reciprocating motion.
3. Set a target position and make the motor move to there. Tick "Repetitive" and make the motor move back and forth between the current position and target position.
4. Set the relative motion displacement value, make the motor move forward or backward by a set displacement value. Tick "Repetitive" and make the motor operate the reciprocating motion at the current position with the set displacement.
5. Do not tick "Continuous" and click "Forward" and "Backward' to make the motor move; click "Continuous", click "Forward" and "Backward" to make the motor to move continuously.
6. Decelerate with the set "Dec." to stop. Although the motion is stopped, the motor is not disabled and the brake keeps releasing.
7. Speed limit function: When "Limit Move (Acc., Dec.)" is ticked, the rotary actuator motion is limited by the "Acc.", "Dec.", "Speed limit" (set in "MotorMovement" interface) and "Max Motor Speed" (set in the "Speed" interface). When "Limit Move (Acc., Dec.)" is not ticked, the actuator motion is only limited by the "Max Motor Speed" set in the "Safe Speed" interface.

Steps for No-Load Trial Run of the Motor:

1. Check the "Speed" does not exceed the permissible maximum speed in the "Safe Speed"interface. It is recommended to set a lower speed operation at the beginning.
2. Click "Enable" before moving and confirm that the brake is released (there will be a "click" sound when the brake is released).
3. Select "Continuous" and click "Forward" to run the motor forward, then observe its operation.
4. Click "Stop" , the motor will decelerate and stop.
   (**Note:** Do not directly click "Motor Stop" on the main interface during operation).
5. Click "Motor Stop" (as shown in Figure 15-2) in the main interface of the software, the motor is disabled and the brake works. The trial run is finished.



Figure 15-2 "Motor Stop" Button on the Main Interface of the Software

15.1 eTunerII: Motion Debugging

First check Device parameters → Safe speed, then open Motion debugging → Parameter command. Confirm secure mounting, suitable load and sufficient motion space; start at low speed. Use Chapter 12 for speed conversion.

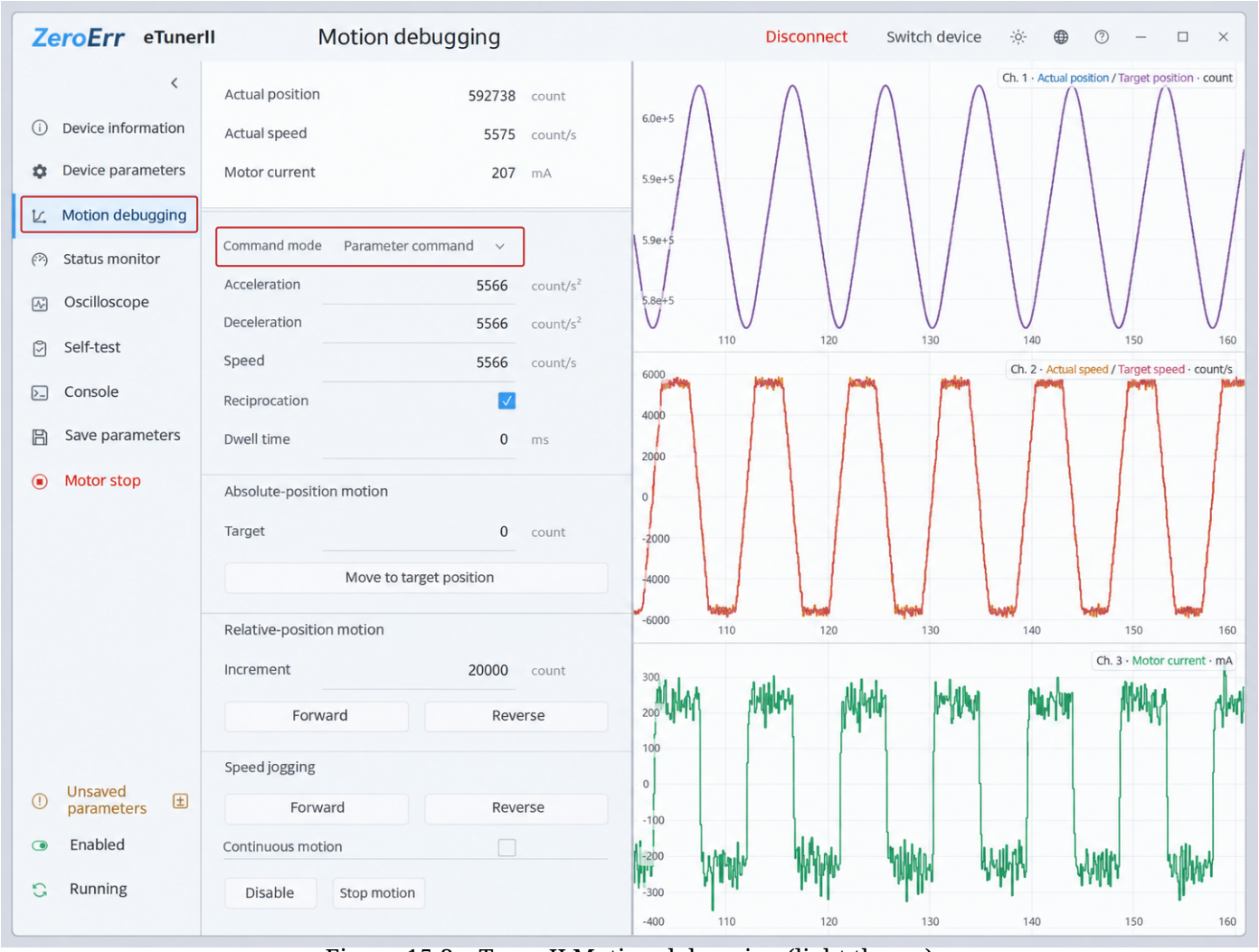

Figure 15-3 eTunerII Motion debugging (light theme)

Displayed values, states, waveforms and test results are examples, not recommended settings or acceptance criteria.

The left side contains parameter commands, position motion and velocity jogging; the right side displays waveforms. See Section D.6 for stopping, jogging and motion-limit differences, and bundled help section 07 for the full procedure.

Chapter 16 PID Tuning with Load

Software applicability: The following eTuner PID, excitation and oscilloscope procedures apply to eTuner. For eTunerII entries, see Section 16.4; for recording and bus-PID switching, see Section D.7. Load placement, tuning principles and parameter applicability are shared.

After loading, tune only the speed-loop and position-loop PID parameters. The current-loop parameters are factory-set and do not need adjustment. First, open the "Oscilloscope" and "PID" on the main interface of eTuner, and click the icons as shown in Figure 16-1a.

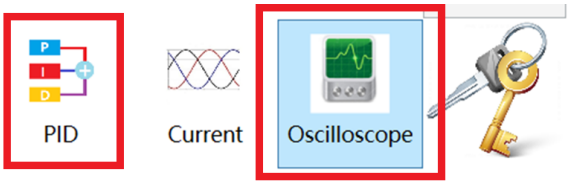

(a) PID settings and Oscilloscope in Main Interface

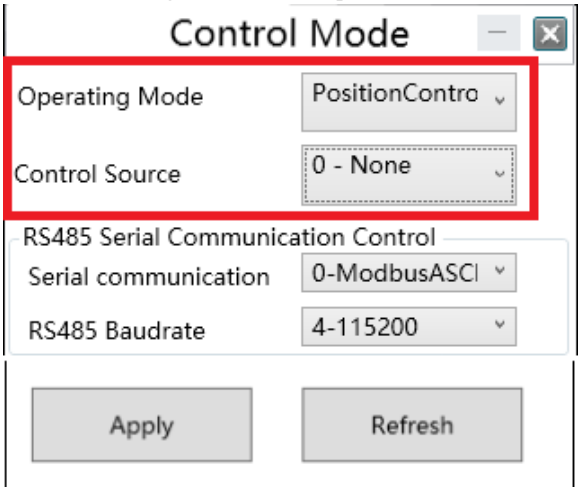

(b) Control Mode Interface Parameter Setting

Figure 16-1 Settings Illustration

Note:

1. Before performing PID tuning, please ensure that the parameters shown in Figure 16-1b are set correctly. On the control mode interface, set "Operation Mode" to "Position Control" and "Control Source" to "0-Not Used". Make these settings while the joint is disabled (click the "Motor Stop" button on the main interface to disable the joint). After setting the parameters, click the "Apply" button at the bottom of the interface to take effect immediately; otherwise, the joint will not operate.

2. Before performing PID tuning, it is recommended to adjust the load position to an appropriate location. For example, if the joint is horizontally installed (with the output shaft axis parallel to the ground), the load position should be adjusted to a vertical position as much as possible (i.e., the load force arm direction is perpendicular to the ground). After adjusting the load position, you can proceed with PID tuning.

16.1 Speed Loop Adjustment

(1) First, select the "Target Speed (limiting amplitude)" and "Actual Speed" as "Signals" in the oscilloscope interface; the "Interval" is "500 *μsec/point*", the "Time" is "2 sec". The "Target Speed (limiting amplitude)" is used as the "Signal", the "Condition" is "≠ 0" and "Position" select "0%", click "Start sampling" to make the oscilloscope in the status of "Waiting for triggering", as shown in Figure 16-2a.

(2) Select square-wave excitation and set "Excit Frequency" of the speed loop in the "PID Adjust" interface as shown in Figure 16-2b, the recommended value is 1Hz. The "Excit Speed" is generally set to 524288/Gear Ratio; Tune PID from the original basic value. Click "Excit Speed"; at the moment, the motor will respond following the excit speed and the oscilloscope will collect data.

(3) Adjust "Speed Loop Gain" first so that the waveform has slight overshoot without excessive oscillation. Then adjust "Speed Loop Integral", the value does not need to be set too large, which can eliminate oscillation properly. The final waveform should be close to the one as shown in Figure 16-2c.

(4) Click "Motor Stop" after the completion of adjustment. Click "Apply" in the left bottom of PID Adjust interface, then click "Save" in the main interface to save parameters (save command will be completed after about 3 seconds), thereby avoiding reverting into original parameters after the drive restarts.

(5) The speed loop excitation type can be set to sine wave excitation, and the resulting waveform should resemble the waveform shown in Figure 16-2d.

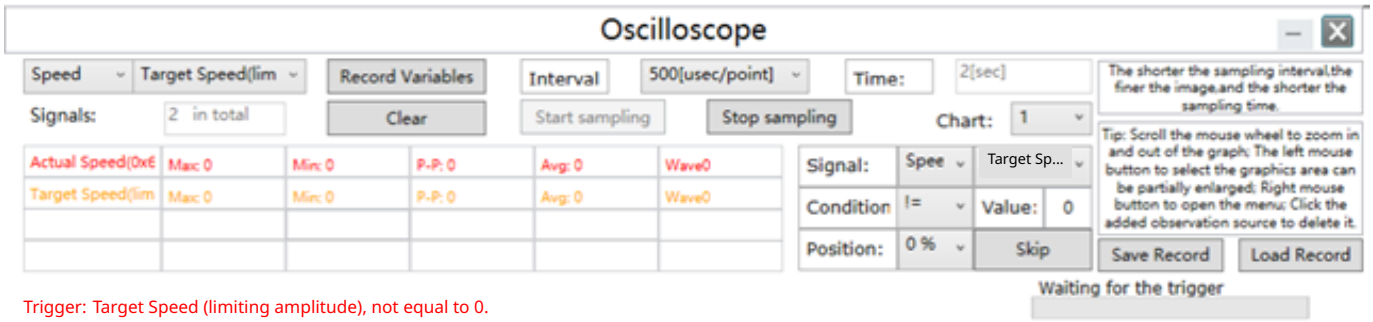

(a) Oscilloscope Settings

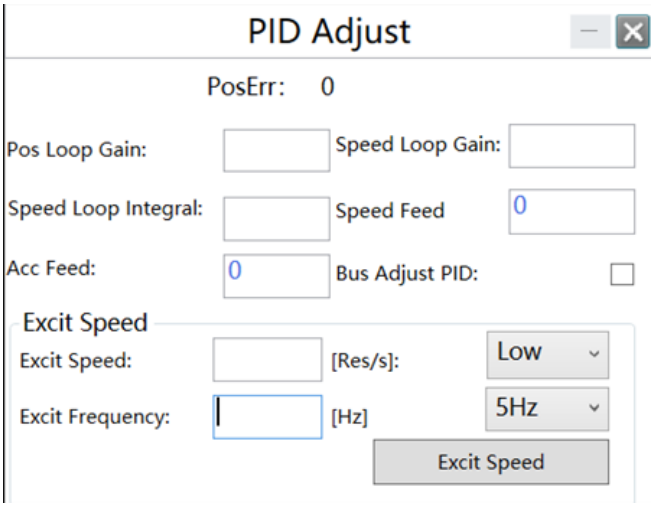

(b) Excit Speed in PID Setting Interface

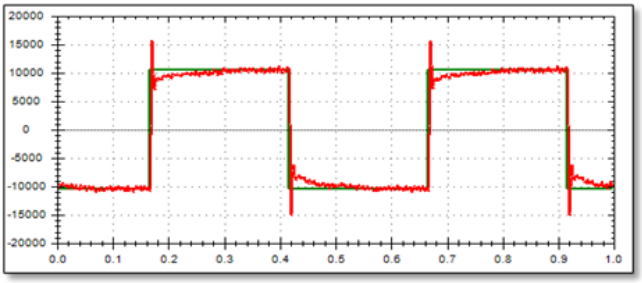

(c) Speed Loop Excitation Response Waveform

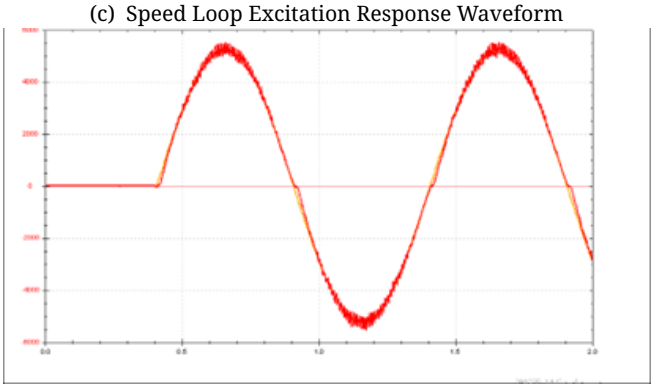

(d) Speed Loop Sine Wave Excitation Waveform

Figure 16-2 Speed Loop Adjustment

16.2 Position Loop Adjustment

(1) Select "Target Position (limiting amplitude)" and "Position" as the "Signals" in oscilloscope interface, the "Interval" is "500 *μsec/point*", the "Time" is "2 sec"; use "Target Speed (limiting amplitude)" in the velocity group as the trigger "Signal", and "Condition" is "≠ 0" and "Position" select "0%", then click "Start sampling" to make oscilloscope in the status of "Waiting for the trigger", as shown in Figure 16-3a.

(2) Set "Excit Frequency" in PID Adjust interface as shown in Figure 16-3b, the recommended value is 1Hz. The "Excit Position" is generally set to 52428/gear ratio; adjust PID from the original basic value. Click "Excit Position"; at the moment, the motor will respond following the excit position and the oscilloscope will collect data.
(3) Adjust "Pos Loop Gain", the final waveform should be close to the one shown in Figure 16-3c.
(4) Click "Motor Stop" after the completion of adjustment. Click "Apply" in the left bottom of "PID Adjust" interface, then click "Save" in the main interface to save parameters (save command will be completed after about 3 seconds), thereby avoiding reverting into original parameters after the drive restarts.
(5) The position loop excitation type can be set to sine wave excitation, and the resulting waveform should resemble the waveform shown in Figure 16-3d.

Setting	Value	Setting	Value
Observed signals	Target Position (limiting amplitude); Position (0x6064)	Sample interval	500 μs/point
Sampling time	2 s	Trigger group	Velocity
Trigger signal	Target Speed (limiting amplitude)	Trigger condition	Not equal to 0
Trigger position	0%	Acquisition action	Start sampling; wait for trigger

(a) Oscilloscope Settings

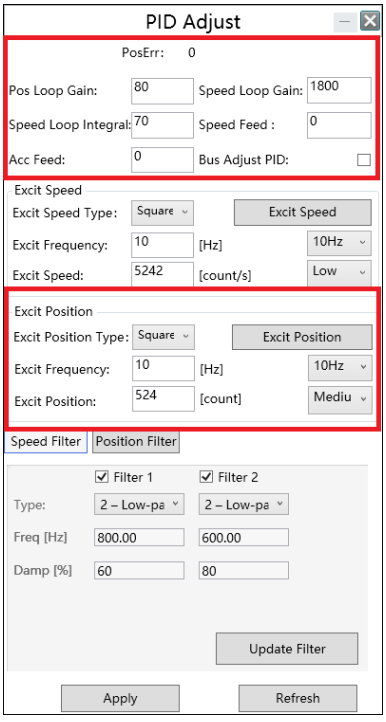

(b) Excit Position in PID Setting Interface

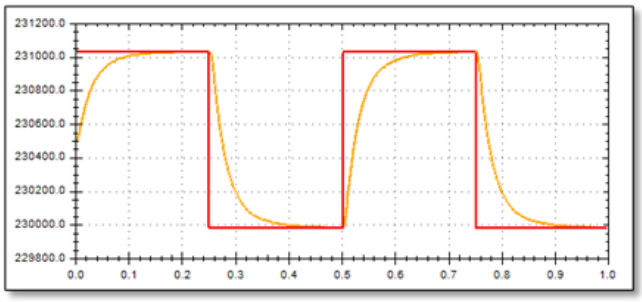

(c) Position Loop Excitation Response Waveform

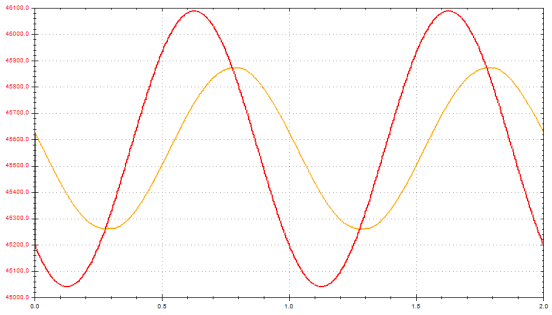

(d) Position Loop Excitation Response Waveform

Figure 16-3 Position Loop Adjustment

16.3 EtherCAT Dynamically Modify PID Function

In addition to being modified by the PC, the PID parameters can also be modified dynamically through the EtherCAT. First, tick "Bus Adjust PID" in "PID Adjust" interface as shown in Figure 16-4, then click "Apply" and "Save", otherwise the modification will be invalid. Then, visit 2381_h: 01_h (speed loop gain), 2381_h: 02_h (speed loop integral), and 2382_h: 01_h (position loop gain) through SDO to dynamically modify PID parameters (Current loop parameters are not available to modify. They are factory settings, do not need to be modified).

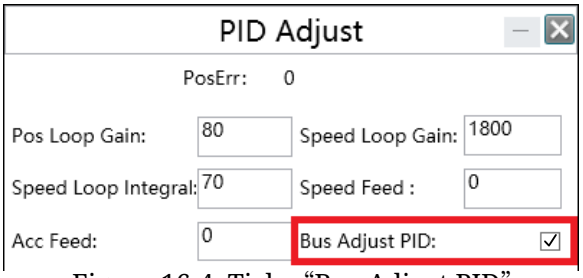

Figure 16-4 Tick "Bus Adjust PID"

Attentions on Using Bus Adjust PID: Tick "Bus Adjust PID" first when EtherCAT modify PID parameter function is needed, otherwise the function cannot be used. If the operation of using PC to modify PID parameters is needed after using EtherCAT to modify PID parameters, please follow the operation steps below to avoid the PC modifying PID operation from not taking effect and becoming a value between the original value and the target value :

(1) Untick "Bus Adjust PID";
(2) Click "Apply" and "Save"
(3) Reenter into "PID Adjust" interface and modify the PID parameters.

For more info regarding EtherCAT dynamically modifies PID function and the description of the related object dictionary, please refer to *Section 8.2* in *eRob CANopen and EtherCAT User Manual*.

16.4 eTunerII: PID and Oscilloscope Entries

eTunerII separates three functions: Device parameters → PID edits parameters, Motion debugging → Curve command provides excitation, and Oscilloscope in the main navigation captures complete waveforms. Follow this chapter's load-placement, tuning and parameter-applicability requirements.

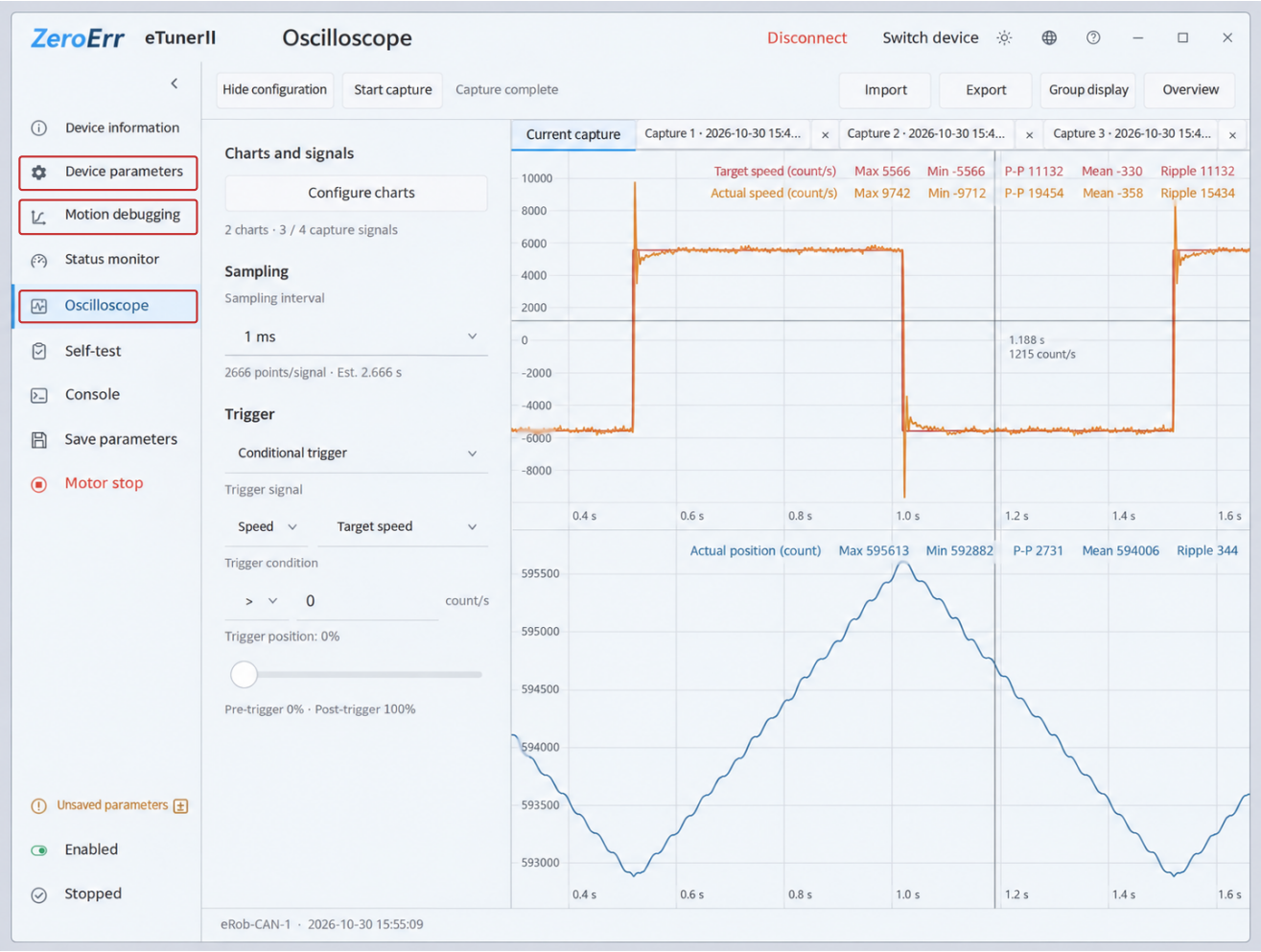

Figure 16-5 eTunerII Oscilloscope (light theme)

Displayed values, states, waveforms and test results are examples, not recommended settings or acceptance criteria.

The left side configures charts, sampling and triggers; the right side shows recorded waveforms. Capture, import and export controls are at the top. See help sections 09 and 07 and Section D.7 for signal and operating differences from eTuner.

Chapter 17 Special Function Introduction

17.1 PDO Dynamic Configuration

In the predefined list of eRob series EtherCAT PDO mapping, 0x1A00/0x1600 mapping TxPDO/RxPDO supports any mapping configuration (TxPDO and RxPDO can each be mapped to a maximum of 76 bytes), including but not limited to:

(1) TxPDO:
- 6041_h
- 6064_h
- $606C_h$
- 6061_h
- etc.

(2) RxPDO:
- 6040_h
- $607A_h$
- 6065_h
- 6060_h
- etc.

Note: Due to the characteristics of the ESC chip, if you need to configure an 8-bit length object index (such as 6060_h/6061_h), you need to configure an empty 8-bit (bit8) at the same time to align with 2 bytes (16bit).More details about PDO mapping list description, please refer to *Section 4.4.2* in *eRob CANopen and EtherCAT User Manual*.

17.2 PID Control Function of Variable Integral Upper Limit

Access parameter ID: 97 (decimal) through CAN can proceed reading and writing operations on "Speed Loop Integral Upper Limit" parameters (parameter properties: INT32, not saved to flash, can be read and written, unit: mA) and also can modify parameters while the rotary actuator is running.

Function Instructions:

(1) Setting integral upper limit to 0 can eliminate the accumulated speed loop integral value.

(2) Restoring integral limit value to the original set value will cause shock. Therefore, it is recommended to increase the value gently (the increased appropriate value of each cycle depends on the actual smoothness of operation, and it is recommended to increase from small value to large value to see the actual effect).

(3) PID control of variable integral upper limit can not only reset the accumulated integral to zero, but also adjust the integral upper limit, which makes the servo running more stable and allows a larger proportional gain and quicker response speed.

Chapter 18 Permissible Forces in All Directions

The eRob Rotary Actuator features a cross roller bearing designed to directly support external loads on the output flange. To fully optimize the performance of the eRob rotary actuator, please calculate:

- Maximum moment load (M_{max});
- Lifespan of the cross roller bearing (L_{10});
- Static safety coefficient (f_s).

18.1 Maximum Moment Load Calculation

The formula for calculating the *maximum moment load* (M_{max}) is provided below:

$$M_{max} = F_{r,max}(L_r + R) + F_{a,max} \times L_a \tag{18.1}$$

Symbol	Definition	Unit	Reference
M_{max}	Max. Moment Load	Nm	-
$F_{r,max}$	Max. Radial Load	N	Figure 18-1
$F_{a,max}$	Max. Axial Load	N	Figure 18-1
L_r	Radial Load Length	m	Figure 18-1
L_a	Axial Load Length	m	Figure 18-1
R	Offset Length	m	Figure 18-1 & Table 18-3

NOTE: Make sure $M_{max} \leq M_c$

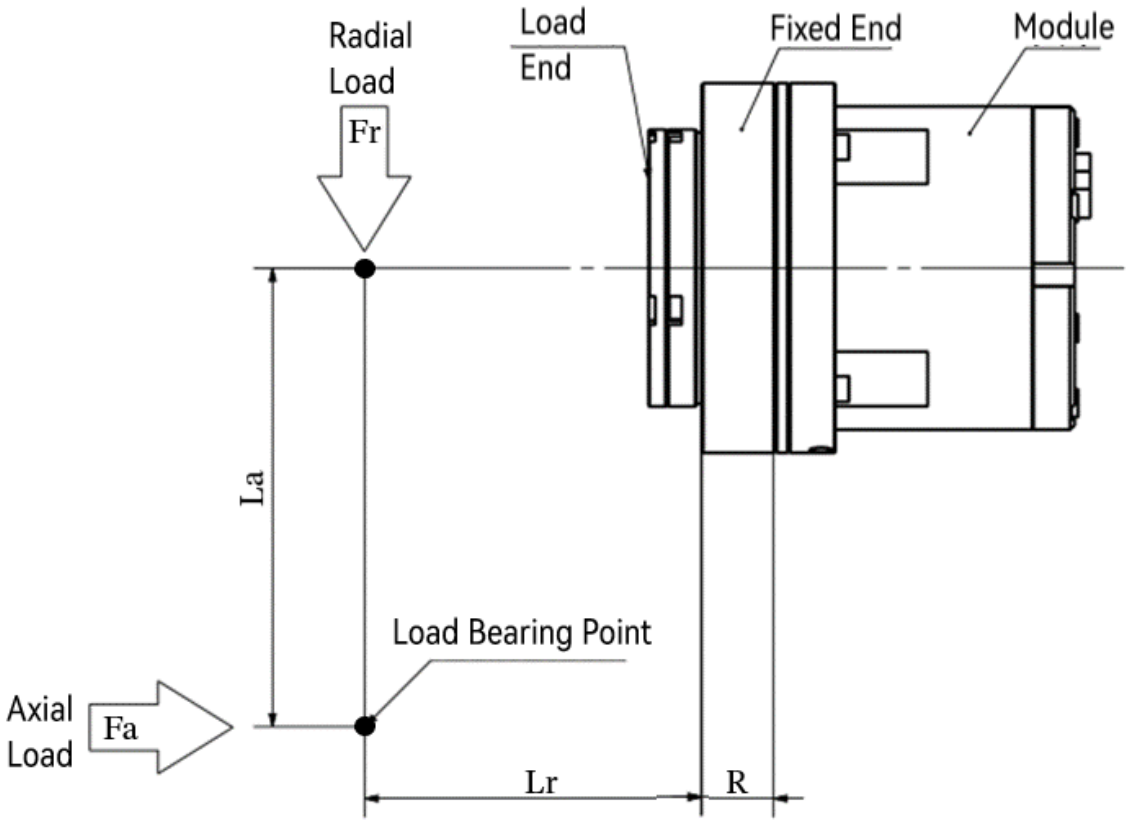

Figure 18-1 External Load Influence Diagram

EXAMPLE Consider the eRob70H module under the following conditions:

$$L_a = 0.2\,\text{m}, \quad L_r = 0.5\,\text{m}, \quad F_{r,\max} = 50\,\text{N}, \quad F_{a,\max} = 30\,\text{N}$$

SOLUTION Refer to Table 18-3 for the permissible moment load:

$$R = 0.0217\,\text{m}, \quad M_c = 74\,\text{Nm}$$

Substitute these values into Formula 18.1:

$$\begin{aligned} M_{\max} &= 50 \times (0.5 + 0.0217) + 30 \times 0.2 \\ M_{\max} &= 32.085\,\text{Nm} \end{aligned}$$

The calculation demonstrates that $M_{\max}(32.085\,\text{Nm}) \leq M_c(74\,\text{Nm})$, confirming compliance with bending requirements.

18.2 Cross Roller Bearing Lifespan Calculation

The formula for calculating the *lifespan of the cross roller bearing* (L_{10}) is provided below:

$$L_{10} = \frac{10^6}{60 \times N_{avg}} \times \left(\frac{C}{f_w \times P_C}\right)^{\frac{10}{3}} \tag{18.2}$$

Symbol	Definition	Unit	Reference
L_{10}	Life (10% damage probability)	hr	-
N_{avg}	Average output speed	RPM	Section 18.2.1
C	Basic dynamic rated load	N	Table 18-3
f_w	Load coefficient	-	Table 18-1
P_C	Dynamic equivalent load	N	Formula 18.3

The formula for calculating the *dynamic equivalent load* (P_C) is provided below:

$$P_C = X \times \left(F_{r,avg} + \frac{2[F_{r,avg}(L_r + R) + F_{a,avg} \times L_a]}{d_p}\right) + Y \times F_{a,avg} \tag{18.3}$$

Symbol	Definition	Unit	Reference
P_C	Dynamic equivalent load	N	Formula 18.3
X	Radial load coefficient	-	Formula 18.7
$F_{r,avg}$	Average radial load	N	Formula 18.4
L_r	Radial Load Length	m	Figure 18-1
R	Offset Length	m	Table 18-3
$F_{a,avg}$	Average axial load	N	Formula 18.5
L_a	Axial Load Length	m	Figure 18-1
d_p	Pitch circle diameter	m	Table 18-3
Y	Axial load coefficient	-	Formula 18.7

Table 18-1 Load Coefficient

Load status	f_w
Steady operation without impact and vibration	1 ~ 1.2
Normal operation	1.2 ~ 1.5
Operation with impact and vibration	1.5 ~ 3

18.2.1 Average Load Calculation

When the radial and axial load fluctuate, as shown in Figure 18-2, an average load is required to confirm the lifespan of the cross roller bearing.

$$F_{r,avg} = \left(\frac{n_1 t_1 |F_{r1}|^{\frac{10}{3}} + n_2 t_2 |F_{r2}|^{\frac{10}{3}} + \cdots + n_n t_n |F_{rn}|^{\frac{10}{3}}}{n_1 t_1 + n_2 t_2 + \cdots + n_n t_n}\right)^{\frac{3}{10}} \tag{18.4}$$

Symbol	Definition	Unit	Reference
$F_{r,avg}$	Average radial load	N	-
n_x	Output Speed	RPM	Figure 18-2
t_x	Time	s	Figure 18-2
F_{rx}	Radial load	N	Figure 18-2

$$F_{a,avg} = \left(\frac{n_1 t_1 |F_{a1}|^{\frac{10}{3}} + n_2 t_2 |F_{a2}|^{\frac{10}{3}} + \cdots + n_n t_n |F_{an}|^{\frac{10}{3}}}{n_1 t_1 + n_2 t_2 + \cdots + n_n t_n} \right)^{\frac{3}{10}} \tag{18.5}$$

Symbol	Definition	Unit	Reference
$F_{a,avg}$	Average axial load	N	-
n_x	Output Speed	RPM	Figure 18-2
t_x	Time	s	Figure 18-2
F_{ax}	Axial load	N	Figure 18-2

$$N_{avg} = \frac{n_1 t_1 + n_2 t_2 + \cdots + n_n t_n}{t_1 + t_2 + \cdots + t_n} \tag{18.6}$$

Symbol	Definition	Unit	Reference
N_{avg}	Average output speed	RPM	-
n_x	Output Speed	RPM	Figure 18-2
t_x	Time	s	Figure 18-2

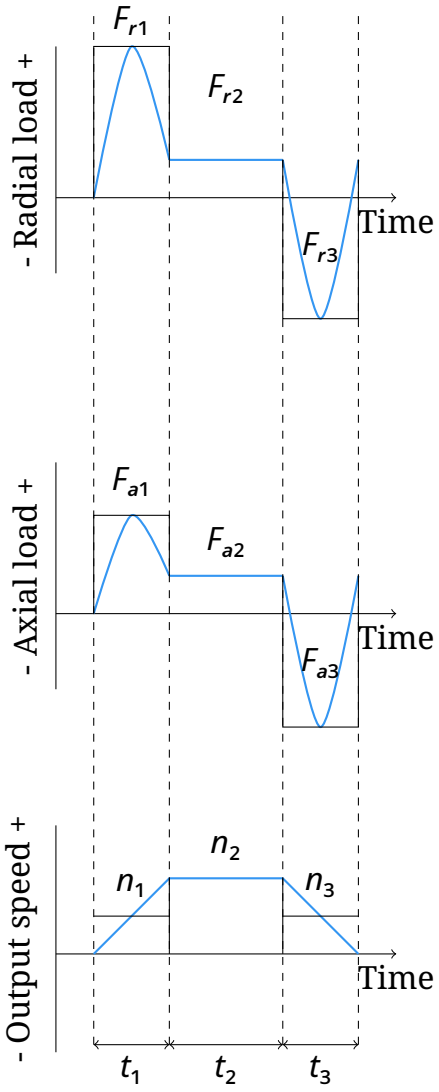

Figure 18-2 Load Pattern Diagram

18.2.2 Load Coefficient Calculation

The *radial load coefficient (X)* and *axial load coefficient (Y)* are critical factors used in the analysis of the lifespan of cross roller bearings. Their calculation methods are presented below.

$$\frac{F_{a,avg}}{F_{r,avg} + \frac{2\times[F_{r,avg}(L_r+R)+F_{a,avg}\times L_a]}{d_p}} \tag{18.7}$$

Symbol	Definition	Unit	Reference
$F_{a,avg}$	Average axial load	N	Formula 18.5
$F_{r,avg}$	Average radial load	N	Formula 18.4
L_r	Radial Load Length	m	Figure 18-1
R	Offset	m	Table 18-3
L_a	Axial Load Length	m	Figure 18-1
d_p	Pitch circle diameter	m	Table 18-3

Table 18-2 Load Coefficient(X,Y) Calculation

Formula 18.7 Solution	X	Y
≤ 1.5	1	0.45
> 1.5	0.67	0.67

Table 18-3 Roller Bearing Specifications of Each eRob Series Code

Series Code	Pitch Circle Diameter (d_p)	Offset Length (R)	Basic Dynamic Load Rating (C)		Basic Static Load Rating (C_0)		Permissible Moment (M_c)	
	m	m	$\times10^2N$	kgf	$\times10^2N$	kgf	$N\cdot m$	$kgf\cdot m$
eRob70F	0.0503	0.0111	29	296	43	438	37	3.8
eRob70	0.05	0.0217	58	590	86	880	74	7.6
eRob80F	0.061	0.0115	52	530	81	826	62	6.3
eRob80	0.06	0.0239	104	1060	163	1670	124	12.6
eRob90	0.07	0.0255	146	1490	220	2250	187	19.1
eRob110	0.085	0.0296	218	2230	358	3660	258	26.3
eRob142	0.111	0.0364	382	3900	654	6680	580	59.1
eRob170	0.133	0.044	433	4410	816	8330	849	86.6

(1) ***Pitch Circle Diameter (d_p):***
The pitch circle diameter, which is the diameter of the circle passing through the center of the rolling elements (rollers) in the cross roller bearing.

(2) ***Offset Length (R):***
The offset length refers to the distance between the centerline of the rollers and the pitch circle of the bearing (centerline of the rolling element's contact points with the raceways).

(3) ***Basic Dynamic Load Rating (C):***
AKA Catalog Load Rating or Basic Load Rating or Basic Dynamic Rated Load, is defined as the radial load that causes 10% of a group of bearings to fail at the rated life of 1 million revolutions.

(4) ***Basic Static Load Rating (C_0):***
AKA Basic Static Rated Load, The static load applied at the central position of the contact area between the rotating element and the raceway, which is $4kN/mm^2$.

(5) ***Permissible Moment Load (M_c):***
The maximum moment of force that can be applied to the output side bearing. Within this specified range, the bearing should be able to maintain its rated performance and operate reliably.

18.3 Static Safety Coefficient Calculation

Under standard operating conditions, the *basic static load rating (C_0)* is typically considered the permissible value for the static equivalent load. However, this permissible value may be adjusted based on specific application requirements and operating conditions. In such cases, the *static safety coefficient (f_s)* is determined using the following equation:

$$f_s = \frac{C_0}{P_0} \tag{18.8}$$

Symbol	Definition	Unit	Reference
f_s	Static Safety Coefficient	-	-
C_0	Basic Static Load Rating	N	Table 18-3
P_0	Static Equivalent Load	N	Formula 18.9

$$P_0 = F_{r,max} + \frac{2M_{max}}{d_p} + 0.44F_{a,max} \tag{18.9}$$

Symbol	Definition	Unit	Reference
P_0	Static Equivalent Load	N	-
$F_{r,max}$	Max. Radial Load	N	Formula 18.1
M_{max}	Max. Moment Load	Nm	Formula 18.1
d_p	Pitch circle diameter	m	Table 18-3
$F_{a,max}$	Max. Axial Load	N	Formula 18.1

Table 18-4 Static Safety Coefficient Chart

Operating condition of the roller bearing	f_s
When high rotational precision is required	≥ 3
When shock and vibration are expected	≥ 2
Under normal operating condition	≥ 1.5

18.4 Ratcheting Torque

Software applicability: The eTuner oscilloscope example in this section explains waveform characteristics. It is not an eTunerII capture. For eTunerII capture entries and duration rules, see Section D.7 and bundled help section 09.

When the rotary actuator is subjected to excess impact torque during operation, the engagement of the teeth between the circular spline and the flexspline may be put momentarily out of alignment instead of damaging the flexspline. This phenomenon is called “ratcheting”, and the

torque is called "ratcheting torque" (see values in Table 18-5). Operating without fixing ratcheting will result in earlier abrasion of the teeth and shorter life of the wave generator bearing due to the effect of the grinding powder generated by ratcheting.

Table 18-5 Ratcheting Torque Values by Series Code (unit: Nm)

Series Code / GR	eRob70F	eRob70	eRob80F	eRob80	eRob90	eRob110	eRob142	eRob170
50	88	88	150	150	220	450	980	1800
80	-	110	-	200	350	680	1400	2800
100	84	84	160	160	260	500	1000	2100
120	-	-	-	120	240	470	980	1900

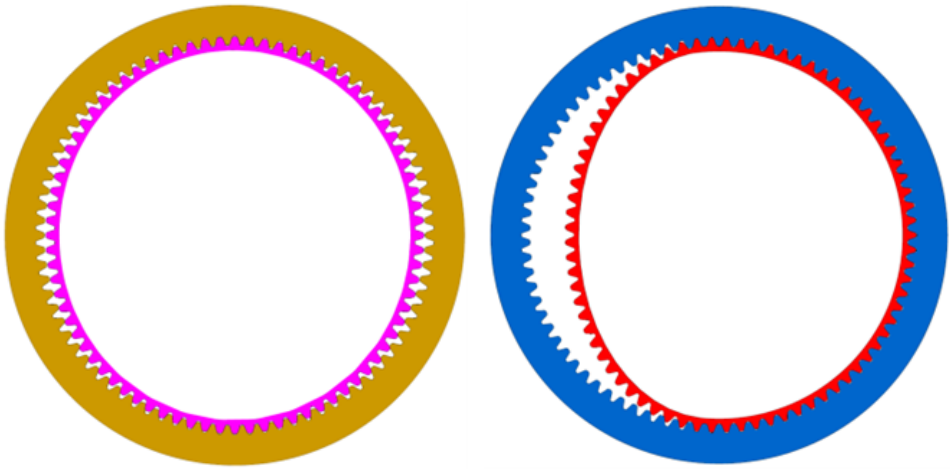

(a) Correct Engagement of Teeth (b) The Engagement of the Teeth is Out of Alignment

Figure 18-3 Strain Wave Gear Teeth Alignment Illustration

Figure 18-3a shows the correct engagement of teeth. When ratcheting happens, the teeth may not be correctly engaged and become out of alignment as shown in Figure 18-3b. Continue to operate in this condition will generate vibration and damage the flexspline.

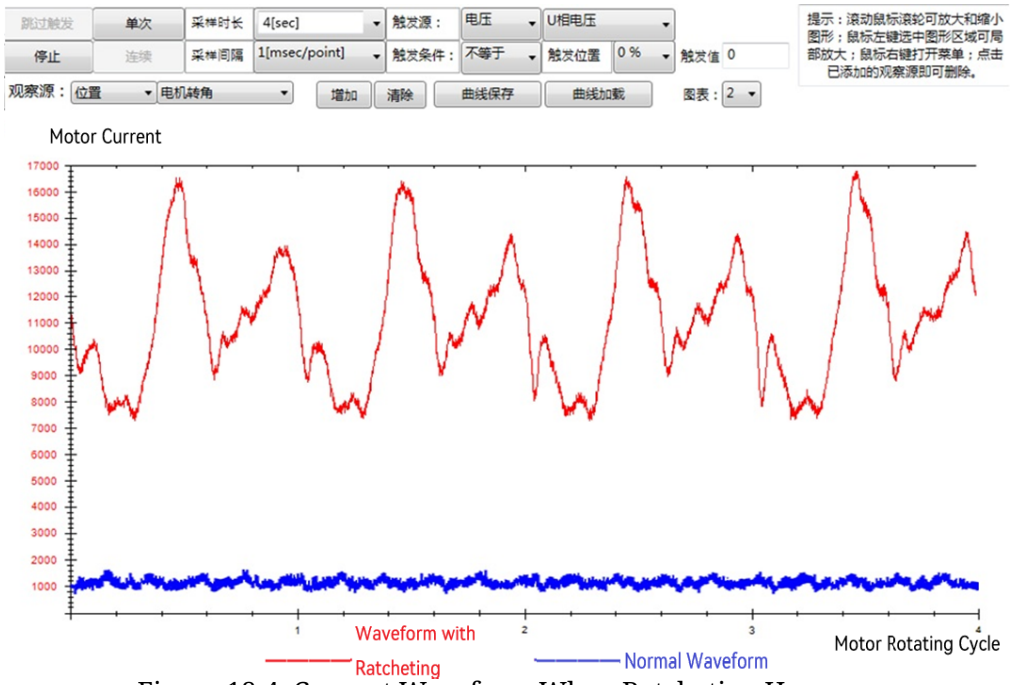

Figure 18-4 Current Waveform When Ratcheting Happens

Taking eRob90H100I as an example, operating at a speed of 5242count/s when ratcheting (motor rotational speed is 1r/s at this moment) (when serious ratcheting is caused, operating the actuator with no- load may also result in alarm) , using oscilloscope to collect the current waveform of the motor (as shown in Figure 18-4, set motor current and motor angle as the “Signal” sources ; sampling “Interval” is 1ms ; sampling “Time” is 4s.), will result in a large current fluctuation. When serious ratcheting happens, operating the rotary actuator with load will generate alarm, such as excess current, motor stall protection, position error exceeded, speed error exceeded, and power temperature being too high etc. The rotary actuator can no longer be used after ratcheting.

Once a ratcheting happens one time, the teeth tips are worn as shown in Figure 18-5a and Figure 18-5b shows the normal teeth tips. Once ratcheting happens two or more times, the torque value will be lowered.

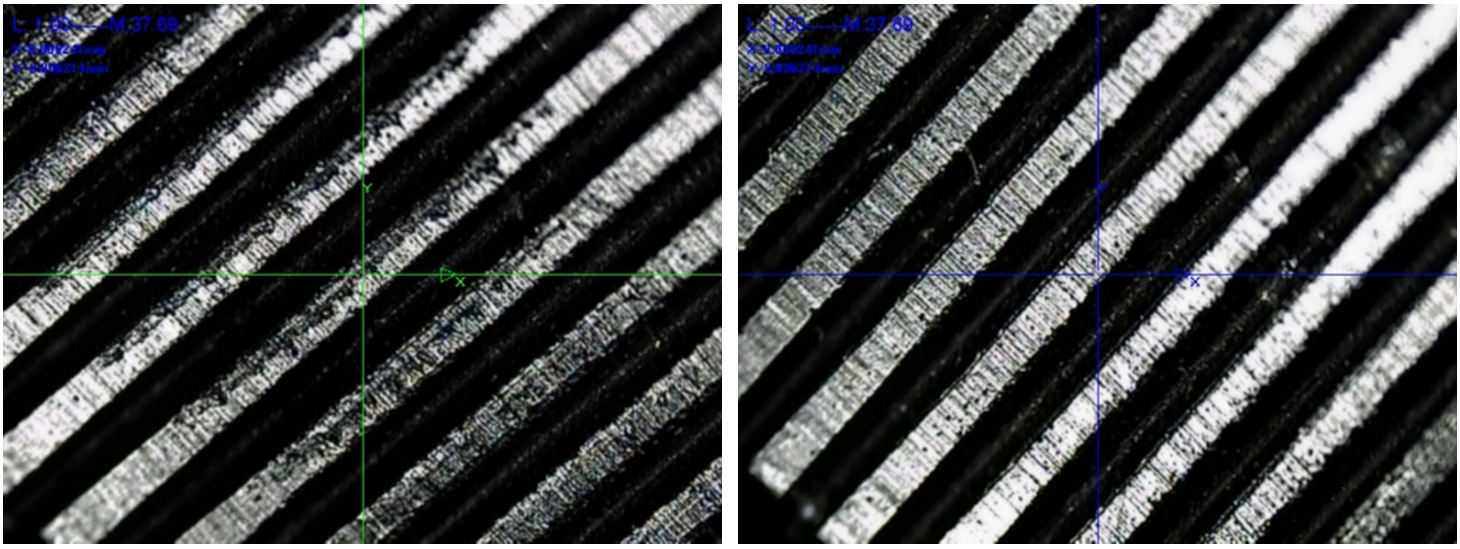

(a) The Tips of the Teeth are Worn (b) The Normal Teeth Tips

Figure 18-5 Strain Wave Gear Teeth

Chapter 19 eRob Installation Requirements

19.1 Locating Pilot Requirement of Flange Connection

The locating pilot in load must be buckled on the designated position as shown in Figure 19-1. Select the locating pilot depth L in Table 19-1 according to the series and applicable structural version. The flange mating face is not allowed to have protrusions such as flash; pay attention to the orifice protrusions, flash etc., which can be caused by drilling easily. The flange must provide a 0.3 mm-deep clearance within the Ød area. The rotary actuator output shaft must not be loaded within the Ød area (as shown in Figure 19-2). The damage of rotary actuator caused by output shaft bearing forces within Ød range due to customers' improper flange design is not covered by the warranty.

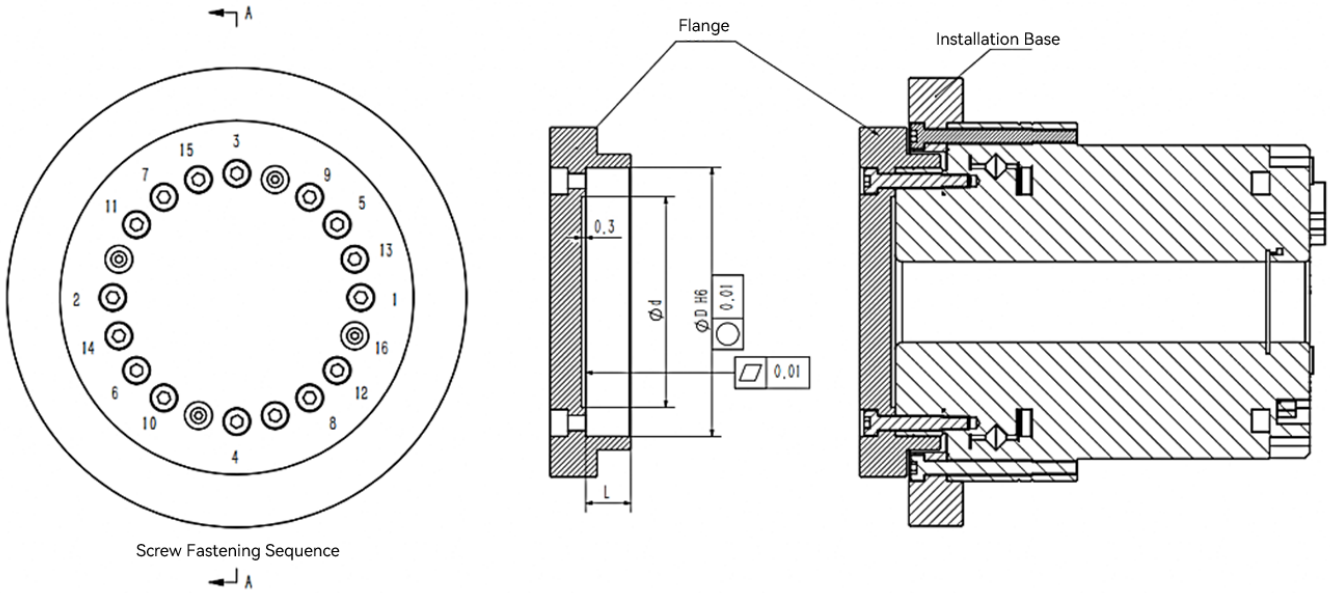

Figure 19-1 Rotary Actuator Installation

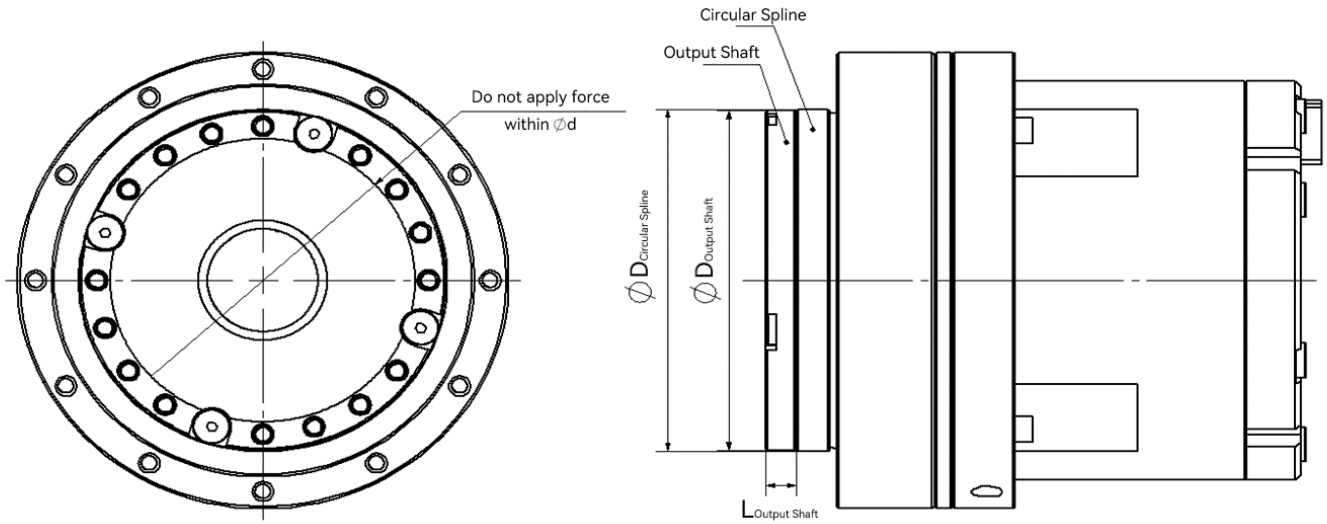

Figure 19-2 Rotary Actuator Installation

Table 19-1 Locating Pilot Parameters

Structural Version Code	D Output (mm)	D Circular Spline (mm)	L Output Shaft (mm)	D (mm)	L (mm)	d (mm)	Locating Pilot Roundness	Locating Pilot Flatness
eRob70F_V3	Ø48.6	$Ø49_{-0.016}^{0}$	3	$Ø49_{0}^{+0.016}$	4.5	Ø38.3	0.01	0.01
eRob70F_V4	Ø48.6	$Ø49_{-0.025}^{0}$	3	$Ø49_{0}^{+0.016}$	4.5	Ø38.3	0.01	0.01
eRob70I_V3	Ø49.6	$Ø50_{-0.016}^{0}$	4	$Ø50_{0}^{+0.016}$	6	Ø39	0.01	0.01
eRob70I_V4 / _V5	Ø49.6	$Ø50_{-0.016}^{0}$	4	$Ø50_{0}^{+0.016}$	6	Ø39	0.01	0.01
eRob80F_V4	Ø58.5	$Ø59_{-0.019}^{0}$	5	$Ø59_{0}^{+0.019}$	6	Ø46	0.01	0.01
eRob80I_V3 / _V4	Ø59.6	$Ø60_{-0.019}^{0}$	5	$Ø60_{0}^{+0.019}$	7	Ø49	0.01	0.01
eRob80I_V5 / _V6	Ø59.6	$Ø60_{-0.019}^{0}$	5	$Ø60_{0}^{+0.019}$	7	Ø49	0.01	0.01
eRob90I_V3 / _V6	Ø69.6	$Ø70_{-0.019}^{0}$	5	$Ø70_{0}^{+0.019}$	7	Ø56	0.01	0.01
eRob110I_V3	Ø84.6	$Ø85_{-0.022}^{0}$	5	$Ø85_{0}^{+0.022}$	7	Ø70	0.01	0.01
eRob110I_V4	Ø84.6	$Ø85_{-0.022}^{0}$	5	$Ø85_{0}^{+0.022}$	7	Ø70	0.01	0.01
eRob110I_V6	Ø84.6	$Ø85_{-0.022}^{0}$	6	$Ø85_{0}^{+0.022}$	8	Ø70	0.01	0.01
eRob142I_V3	Ø109.6	$Ø110_{-0.022}^{0}$	7	$Ø110_{0}^{+0.022}$	9	Ø91	0.01	0.01
eRob142I_V4	Ø109.6	$Ø110_{-0.022}^{0}$	7	$Ø110_{0}^{+0.022}$	9	Ø91	0.01	0.01
eRob170I_V3	Ø134.6	$Ø135_{-0.025}^{0}$	7	$Ø135_{0}^{+0.025}$	10	Ø102	0.01	0.01

V3, V4, V5, and V6 in the table identify structural versions. Versions separated by "/" in one row each use that row's parameters. Use the complete model on the nameplate to obtain the applicable 2D installation drawing and confirm the structural version before selecting parameters; do not select by series code alone. MIN on a drawing denotes the minimum locating pilot depth. For structural versions not listed, refer to the applicable 2D installation drawing or contact technical support.

NOTE:

(1) Fail to follow the installation requirement of the eRob output end connecting flange may cause the output shaft to deform, then the torque sensor cannot work properly even cause irreversible damage.

(2) The output shaft length requirement is to ensure:
   (1) the radial positioning accuracy of the output flange;
   (2) the load moment is transmitted through the output flange locating pilot to the precision cross roller bearing that directly supports the external load.

(3) The roundness and flatness of the customer's load flange locating pilot should be as close as possible to the required values specified in Table19-1. Excessive roundness or flatness will lead to uneven force on the output end of the eRob, which will lead to abnormal noise or vibration of the eRob.

(4) The locating pilot of the customer's load flange must not be painted. Painting this surface may cause flatness deviation, resulting in uneven loading on the module output end. Consequently, the encoder disk mounted on the module output shaft may shift, leading to a positional offset in the output encoder readings after power-off and restart.

19.2 Recommended Mounting-Housing Bore Dimensions and Tolerances

The *∅D* marked in Figure 19-3 identifies the inside diameter of the mounting housing that mates with the actuator. Refer to Table 19-2 for the recommended dimensions and tolerances, and select the row for the applicable structural version.

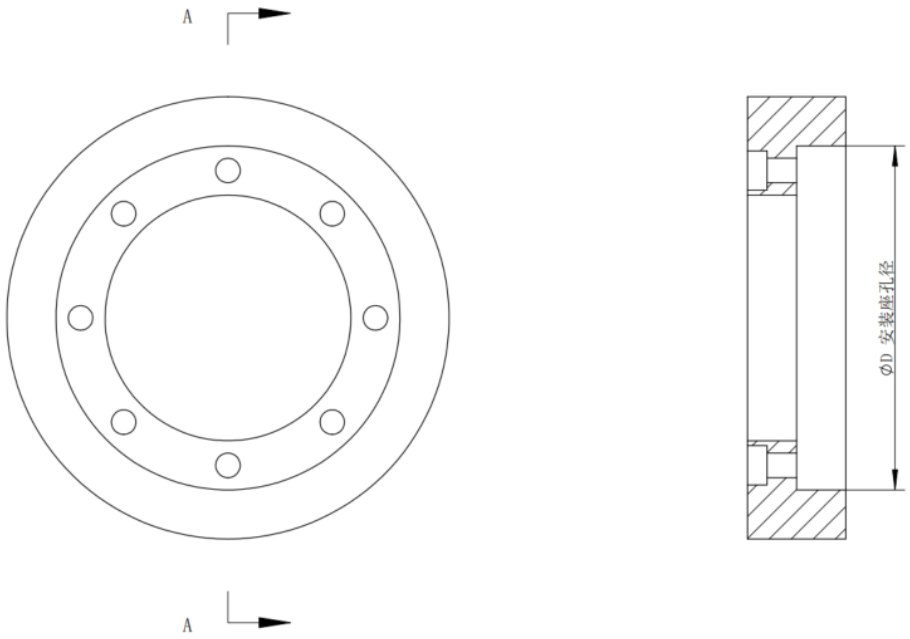

Figure 19-3 Mounting-Housing Bore Diameter (*∅D*)

Table 19-2 Recommended Mounting-Housing Bore Dimensions and Tolerances (Unit: mm)

Applicable Structural-Version Code	Recommended Bore Diameter	Upper Deviation	Lower Deviation
eRob70F_V3 / _V4 eRob70I_V4 / _V5	∅70	+0.029	+0.010
eRob80F_V4 eRob80I_V5 / _V6	∅80	+0.029	+0.010
eRob90I_V3 / _V6	∅90	+0.034	+0.012
eRob110I_V4 / _V6	∅110	+0.034	+0.012
eRob142I_V4	∅142	+0.039	+0.014
eRob170I_V3	∅170	+0.039	+0.014

Note: The dimensions and tolerances in this table are recommendations, not mandatory requirements. They apply only to the structural versions listed.

19.3 Screw Tightening Procedure

Before assembly, verify the thread specification, screw head type, effective thread engagement, clearance at the bottom of each blind hole, and tightening torque against the applicable installation requirements. For the flange-mounting and actuator-mounting positions listed in Table 19-4 and the rear-side positions listed in Table 19-5, select the parameters according to Section 19.4. When several screws are used in one connection, tighten them evenly in stages. Where diametrically opposed pairs exist, use a diagonal sequence; otherwise, use an alternating circumferential sequence. First, thread in each screw until the bearing surface under a hexagon socket head cap screw, or the conical bearing surface of a hexagon socket countersunk head screw, seats against its mating surface without applying the final tightening torque. Second, snug all screws evenly in stages, and confirm that every bearing surface is seated and that no connected part is warped. Finally, using the same sequence, tighten each screw to the specified value with a torque tool. For positions listed in Table 19-4, obtain the recommended tightening torque and permissible tightening-torque deviation from Table 19-3. For positions listed in Table 19-5, apply the values specified directly in that table.

19.4 Recommended Tightening Torque and Minimum Effective Thread Engagement

Before Selecting Installation Parameters

These parameters apply only to the installation positions listed in Tables 19-4 and 19-5. The tables distinguish mounting structures by structural-version code (for example, `eRob70I_V4`). Use the complete model on the nameplate to obtain the applicable 2D installation drawing, then confirm the structural version, installation position, thread specification and screw head type. Do not select parameters by nominal screw diameter alone.

(1) Flange mounting and actuator mounting: confirm the minimum effective thread engagement in Table 19-4, then select the recommended tightening torque and permissible deviation for the same thread specification and screw head type from Table 19-3.

(2) Rear-side mounting: select the recommended tightening torque, permissible deviation and minimum effective thread engagement directly from Table 19-5.

If any condition differs or cannot be confirmed, do not apply these parameters. Follow the applicable 2D installation drawing or contact technical support before assembly. A product-specific installation specification supplied with the product takes precedence where it specifies otherwise.

Effective thread engagement is the axial length over which complete internal and external thread profiles overlap and carry load after assembly. It excludes entry chamfers, counterbores, thread runout, and incomplete threads at the bottom of a hole. Do not substitute the overall screw length, total blind-hole depth, or tapped depth. Determine the engagement as the smaller of the screw's axial insertion into the internally threaded part and the complete internal-thread depth, excluding all non-load-carrying regions. Before assembly, calculate it from the complete thread depth in the applicable model's 2D installation drawing, the connected-part thickness, and the selected screw dimensions. If the drawing lacks the required information, install the screws supplied for the product or obtain written installation parameters from ZeroErr technical support.

Use black-oxide hexagon socket screws of property class 12.9. Remove oil, metal chips, and other contaminants from the internal and external threads, screw-head bearing surfaces, and installation contact surfaces. Clean with alcohol and allow all surfaces to air-dry completely.

These parameters apply to dry assembly; do not use lubricants, thread-locking compounds, or anti-seize compounds. Tighten evenly in stages using the applicable sequence in Section 19.3, and use a calibrated torque tool with an appropriate range.

Table 19-3 Recommended Screw Tightening Torque

Thread Specification	Screw Head Type	Recommended Tightening Torque	Permissible Tightening-Torque Deviation
M3×0.5	Hexagon socket head cap screw	2.0 N·m	±0.2 N·m
M3×0.5	Hexagon socket countersunk head screw	1.4 N·m	±0.2 N·m
M4×0.7	Hexagon socket head cap screw	4.5 N·m	±0.2 N·m
M4×0.7	Hexagon socket countersunk head screw	2.0 N·m	±0.2 N·m
M5×0.8	Hexagon socket head cap screw	9.0 N·m	±0.5 N·m
M5×0.8	Hexagon socket countersunk head screw	4.5 N·m	±0.2 N·m
M6×1.0	Hexagon socket head cap screw	15.5 N·m	±0.5 N·m

Table 19-4 Minimum Effective Thread Engagement for Flange-Mounting and Actuator-Mounting Positions

Thread Specification and Screw Head Type	Applicable Structural-Version Code and Installation Position	Minimum Effective Thread Engagement
M3×0.5 hexagon socket head cap screw	Flange mounting: eRob70I_V4, eRob70I_V5, eRob70F_V3, eRob70F_V4, eRob80I_V5, eRob80I_V6, eRob80F_V4, eRob90I_V3, eRob90I_V6	3.0 mm
M3×0.5 hexagon socket head cap screw	Actuator mounting: eRob80I_V6, eRob80F_V4, eRob90I_V6	4.0 mm
M3×0.5 hexagon socket head cap screw	Actuator mounting: eRob70I_V4, eRob70I_V5, eRob70F_V3, eRob70F_V4; flange mounting: eRob70T_V4, eRob80T_V5, eRob90T_V3	4.5 mm
M3×0.5 hexagon socket head cap screw	Actuator mounting: eRob80I_V5, eRob90I_V3	4.5 mm
M3×0.5 hexagon socket countersunk head screw	Flange mounting: eRob90T_V3	3.0 mm
M4×0.7 hexagon socket head cap screw	Flange mounting: eRob110I_V4, eRob110I_V6	3.5 mm
M4×0.7 hexagon socket head cap screw	Actuator mounting: eRob110I_V6	3.5 mm
M4×0.7 hexagon socket head cap screw	Actuator mounting: eRob110I_V4	6.0 mm
M4×0.7 hexagon socket head cap screw	Flange mounting: eRob110T_V4	5.0 mm
M4×0.7 hexagon socket countersunk head screw	Flange mounting: eRob110T_V4	3.0 mm
M5×0.8 hexagon socket head cap screw	Flange mounting: eRob142I_V4	6.5 mm

Table 19-4 continued

Thread Specification and Screw Head Type	Applicable Structural-Version Code and Installation Position	Minimum Effective Thread Engagement
M5×0.8 hexagon socket head cap screw	Actuator mounting: eRob142I_V4	7.5 mm
M5×0.8 hexagon socket head cap screw	Flange mounting: eRob142T_V4	6.5 mm
M5×0.8 hexagon socket countersunk head screw	Flange mounting: eRob142T_V4	4.0 mm
M6×1.0 hexagon socket head cap screw	Flange mounting: eRob170I_V3	6.0 mm
M6×1.0 hexagon socket head cap screw	Actuator mounting: eRob170I_V3	10.0 mm

NOTE: M6 hexagon socket countersunk head screws are outside the scope of this section. Do not apply the recommended tightening torque for a hexagon socket head cap screw to a hexagon socket countersunk head screw of the same nominal size.

Rear-Side Screw Tightening Parameters For a rear-side position, select the recommended tightening torque, permissible tightening-torque deviation, and minimum effective thread engagement directly from Table 19-5 using the structural-version code and the actual installation position. Do not apply the flange-mounting or actuator-mounting parameters in Tables 19-3 and 19-4.

Table 19-5 Recommended Tightening Parameters and Minimum Effective Thread Engagement for Rear-Side Screws

Thread Specification and Screw Head Type	Applicable Structural-Version Code and Installation Position	Recommended Tightening Torque	Permissible Tightening-Torque Deviation	Minimum Effective Thread Engagement
M2.5 hexagon socket head cap screw	Housing rear side: eRob110I_V6	1.0 N·m	±0.2 N·m	4.0 mm
M3 hexagon socket head cap screw	Module rear cover: eRob70F_V3, eRob70F_V4, eRob70I_V4, eRob70I_V5, eRob70T_V4	1.2 N·m	±0.2 N·m	3.0 mm
M3 hexagon socket head cap screw	Module rear cover: eRob80F_V4, eRob80I_V5, eRob80I_V6, eRob80T_V5	1.2 N·m	±0.2 N·m	3.0 mm
M3 hexagon socket head cap screw	Module rear cover: eRob90I_V3, eRob90I_V6, eRob90T_V3	1.2 N·m	±0.2 N·m	3.0 mm
M3 hexagon socket head cap screw	Module rear cover: eRob110I_V4, eRob110I_V6, eRob110T_V4, eRob142I_V4, eRob142T_V4, eRob170I_V3	1.2 N·m	±0.2 N·m	3.0 mm
M3 hexagon socket head cap screw	Housing rear side: eRob70T_V4, eRob80T_V5, eRob90T_V3, eRob110T_V4, eRob142T_V4	1.4 N·m	±0.2 N·m	5.0 mm
M4 hexagon socket head cap screw	Housing rear side: eRob142I_V4, eRob170I_V3	4.5 N·m	±0.2 N·m	6.0 mm

NOTE: The cable-bracket mounting holes shown in Figure 6-16a and the grounding mounting holes shown in Figure 6-17b are *Module rear cover* positions in Table 19-5. *Housing rear side* is a different installation position; select the row by the applicable model and actual position, and do not mix the two positions.
All connections must meet the screw property class, surface treatment, cleaning and dry-assembly conditions specified in this section. These parameters do not apply to repaired threads, connections fitted with inserts, or structurally modified connections. Where both socket head cap screws and countersunk head screws are listed for the same structural version and position, select the row specified by the hole type and screw head type in the applicable 2D installation drawing; do not interchange them.
WARNING: Do not compensate for insufficient effective thread engagement, or attempt to prevent loosening, by increasing the tightening torque. If loosening prevention is required, use the method specified in the applicable model's 2D installation drawing. If the drawing does not specify a method, obtain written installation parameters from ZeroErr technical support. If a thread-locking compound is used, the applicable tightening parameters must be redetermined. Stop assembly immediately if the bearing surface is not yet seated but the torque rises rapidly, the torque drops suddenly, the screw continues to rotate without tightening, metal chips appear, a thread is damaged, or a bearing surface deforms. Do not continue applying force or reuse damaged screws or threaded holes.

19.5 Common Improper Installation

(1) Positioning deficiency, only have plane installation. As shown in Figure 19-4a.
(2) Insufficient positioning depth, fail of efficient positioning. As shown in Figure 19-4b.

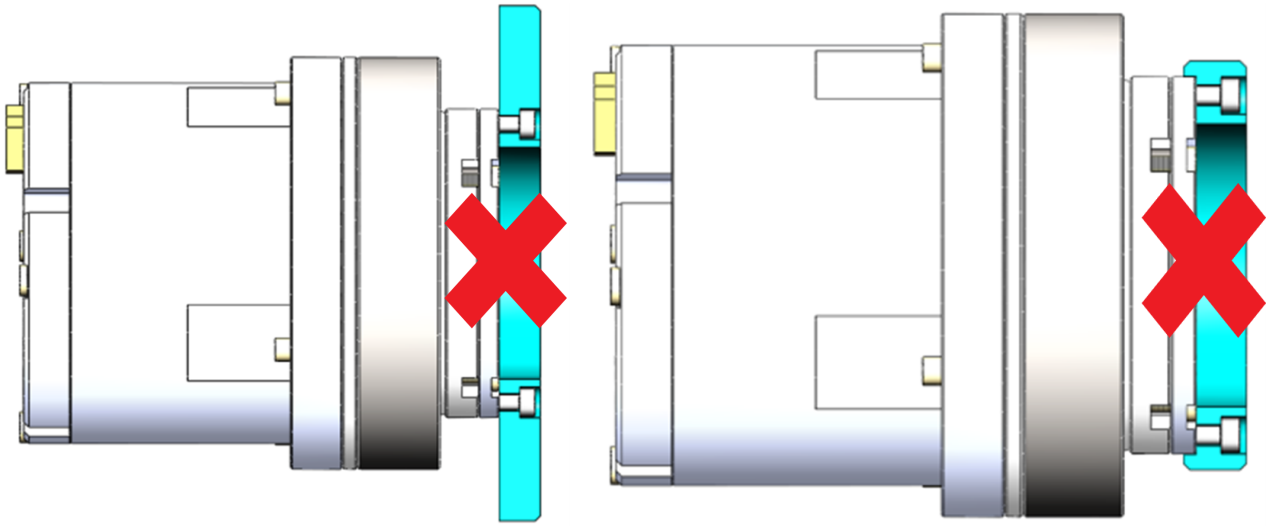

(a) Lack of Positioning Locating Pilot (b) Insufficient Positioning Locating Pilot Depth
Figure 19-4 Common Improper Installation

(3) Flange protrusion caused by drilling. As shown in Figure 19-5.

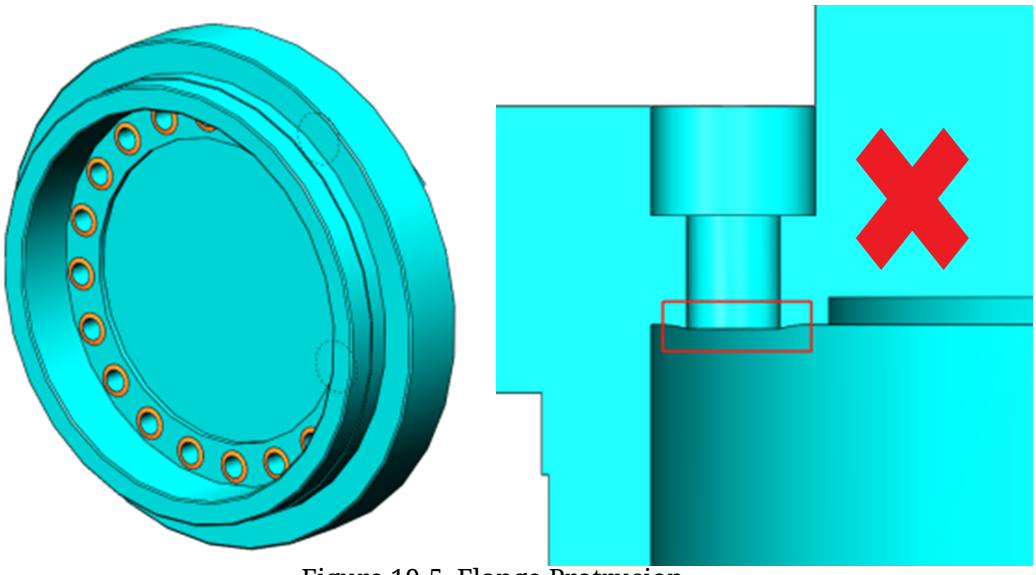

Figure 19-5 Flange Protrusion

(4) The flatness is out of tolerance due to poor processing. As shown in Figure 19-6.

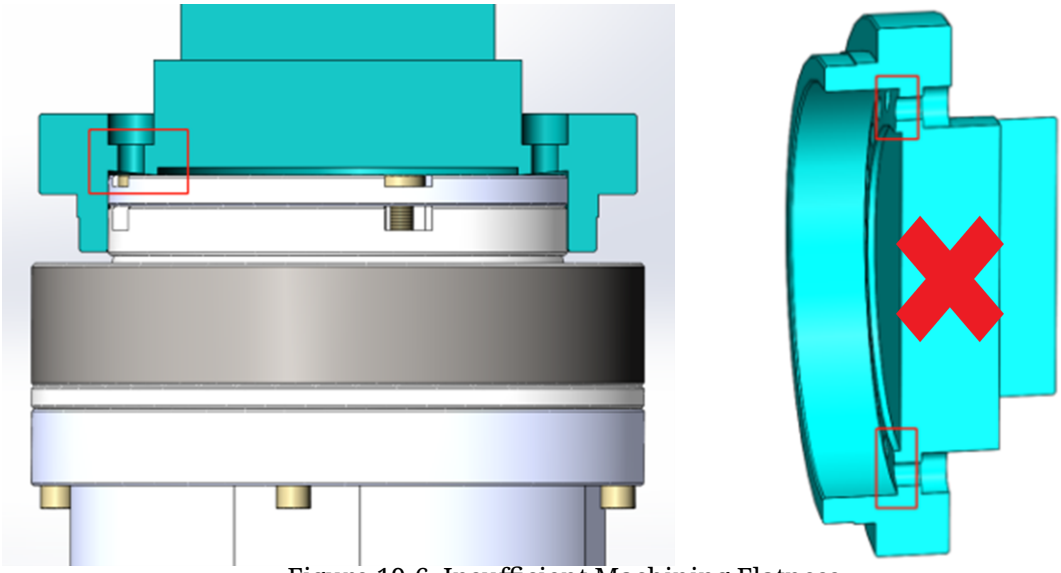

Figure 19-6 Insufficient Machining Flatness

(5) The improper installation will affect the force of the module, as shown in Figure 19-7: Since the module is equipped with precision cross roller bearing to directly support external loads, the improper installation method does not transmit the force of the output flange to the cross roller bearing, but to the bolts that fix the motor casing.

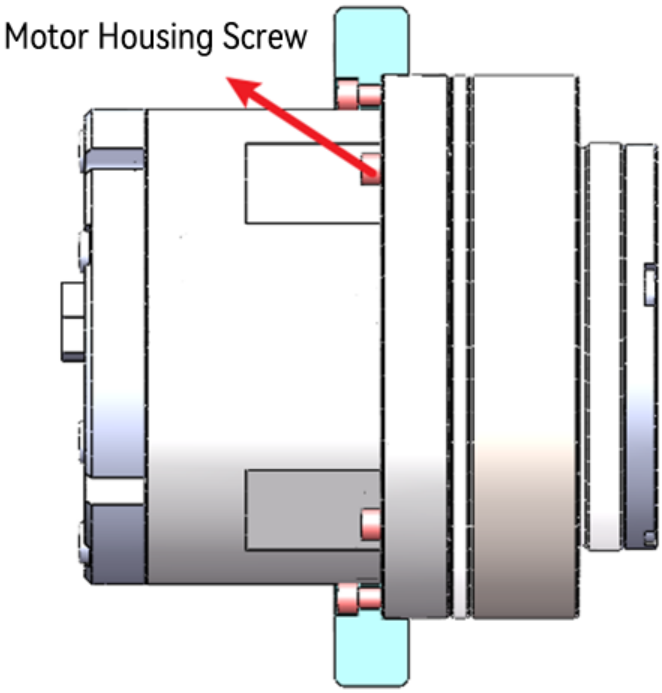

Figure 19-7 Improper Installation
(Fail to transmit the force of the output flange to the cross roller bearing)

If the actuator must be mounted through the motor-housing end using a through-bolt connection with a nut, Tables 19-3, 19-4, and 19-5 do not apply to that connection. Obtain written installation parameters from ZeroErr technical support, including the bolt specification, property class, tightening torque, and method for preventing loosening. During assembly, hold one end stationary and apply the specified tightening torque only to the other end. Do not apply opposing tightening torques to both ends simultaneously.

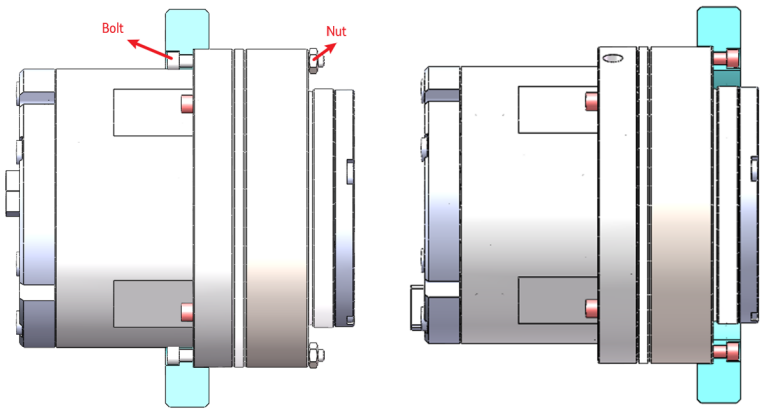

Figure 19-8 Correct Methods for Fastening the Module
at the Motor-Housing Mounting End and the Cross-Roller-Bearing End

(6) The installation of the eRob module does not require the addition of external bearings. As shown in Figure 19-9, the eRob module is equipped with integrated cross-roller bearings that can withstand both radial and axial loads. The load-bearing capacity of the eRob module should be checked according to Chapter 18. Adding external bearing support can overconstrain the installation, resulting in abnormal noise, vibration, ratcheting, or buckling of the eRob module.

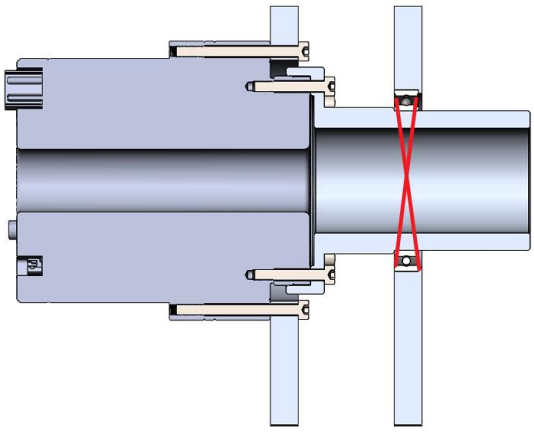

Figure 19-9 No External Bearings Required for eRob Module Installation

If abnormal vibration or noise occurs, check mounting-surface cleanliness and flatness, support rigidity and screw fastening against this chapter. If the condition persists after the installation has been checked, follow Chapter 27 or contact technical support.

19.6 Pre-Installation Cleaning Advisory

Ensure the mounting face is thoroughly cleaned before installation to prevent any interference caused by metal chips, thread glues, sealants, particles, or dust accumulation. Failure to achieve a clean mounting face may result in unreliable fits, leading to jitters and noise during operation. The cleaning, air-drying, and dry-assembly requirements for the internal and external threads, screw-head bearing surfaces, and installation contact surfaces of the threaded connections listed in Tables 19-4 and 19-5 are also specified in Section 19.4.

Chapter 20 Firmware Version Upgrade

Definition rules of firmware version of rotary actuator are as shown in Figure 20-1.

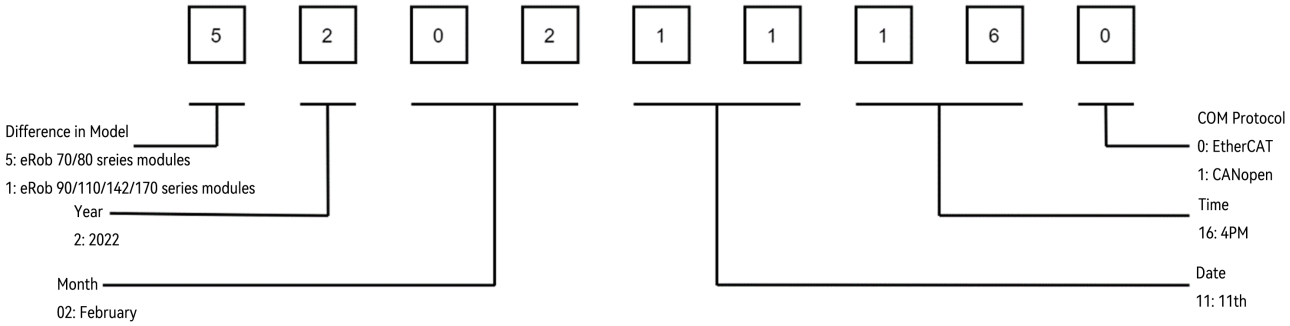

Figure 20-1 Definition rules of firmware version of rotary actuators

For more information regarding the Firmware Versions,
please visit our official website: en.zeroerr.cn/support/firmware-version

For more information regarding the Firmware Update Tool, i.e., the CAN_Update_Tool,
please refer to our CAN_Update_Tool User Manual

Chapter 21 Restoring Factory Parameter Function

Software applicability: The steps and prompts below describe eTuner. For eTunerII factory restore and parameter files, see Section D.12. This chapter's delivery-date, firmware and applicability conditions remain in force.

The operation steps of restoring factory parameters are as shown in Figure 21-1.

(1) Connect eTuner (refer to YouTube Tutorial) and then click "Parameter", the "Upload and Download" window pops up.

(2) Click "Reset parameters" and wait until the progress bar is completed. Click "Confirm" in the "Tips" window as shown in Figure 21-1.

(3) Power off and restart, reconnect in eTuner, confirm the parameters are restored. Then click "Save" to save the restored parameters.

Note:

(1) The restoring factory parameter function can be used only when part of parameters or all the parameters are lost due to unexpected power failure during the process of saving parameters.

(2) When applying the restore-factory-parameters function, confirm that the rotary actuator uses the latest officially released firmware version (firmware version X2040816X or later) and was delivered after April 8, 2022. Actuators delivered before this date do not support this function.

(3) In the case of "Note (1)" but not meeting the conditions of "Note (2)", please promptly contact our technical support engineers for confirmation.

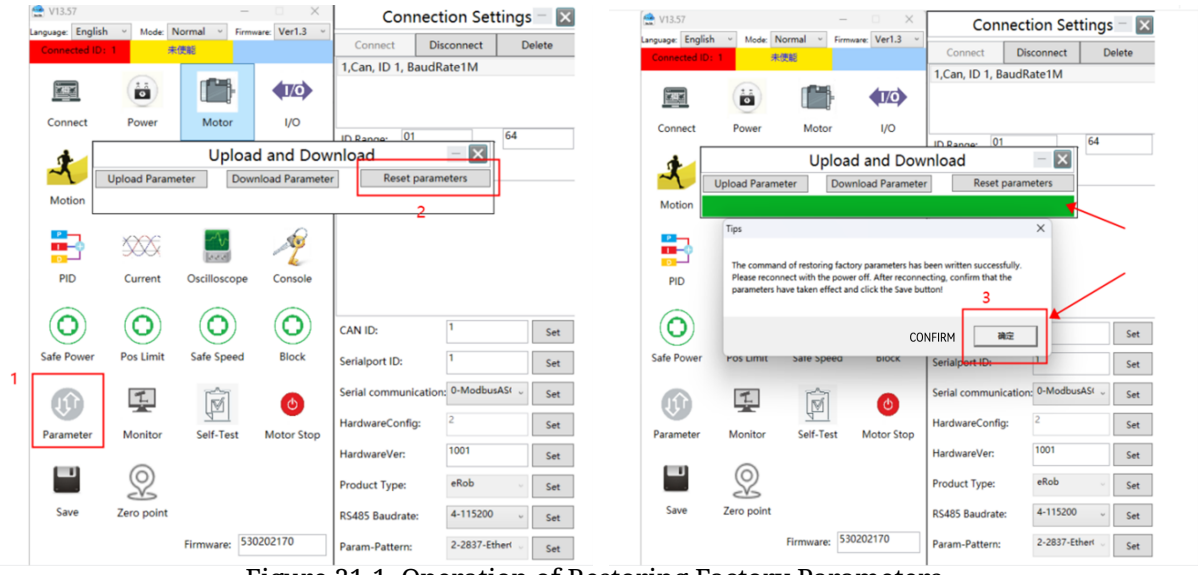

Figure 21-1 Operation of Restoring Factory Parameters

Chapter 22 Safe Torque Off (STO)

Software applicability: The I/O settings, selection numbers and screenshots below describe eTuner. For eTunerII STO configuration, see Section D.8. Product wiring and safety requirements are shared; check selections in the application in use.

Safe torque off (STO) function is used under the conditions of emergency stop and prevention of unexpected start-up. When STO signal is triggered, the motor power will be turned off and the brake will be enabled, but the drive power does not need to be disconnected.

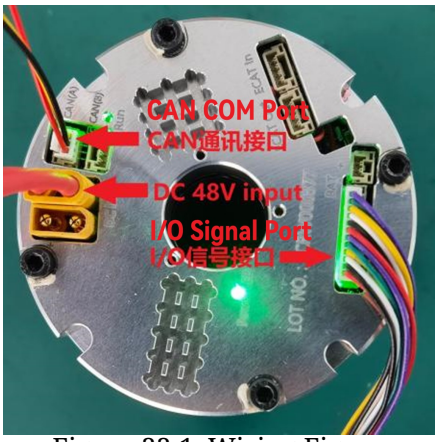

Figure 22-1 Wiring Figure

Note:

(1) More details for STO wiring figures, please refer to Figure 6-12 STO terminal connection in Section 6.5. The rotary actuator can support two STO branch circuits (STOA and STOB). When only one branch circuit is configured, connect STOA interface.

22.1 STO Function Configuration

As shown in Figure 22-1, install eTuner Setup Support Software on a computer, connect CAN communication interface of rotary actuator via eRob to PC Connector, connect 12P I/O wiring terminal and I/O signal interface, then supply proper power for rotary actuator.

22.1.1 One STO Branch Circuit Function Configuration

As shown in Figure 22-2, connect eTuner, enter control interface, select "0-None" in "Control Source". Then enter "I/O Settings" interface to set STO function configuration (pay attention to check "Status Monitor" interface. Only when it displays "Disable", can the function modification be allowed.)

Set DIn01 to "STOA", set STO configuration to "2-One of STO", click apply and save in sequence. Wait about 3 seconds, it will be prompted that the save command is completed. Then STO one branch circuit configuration is completed.

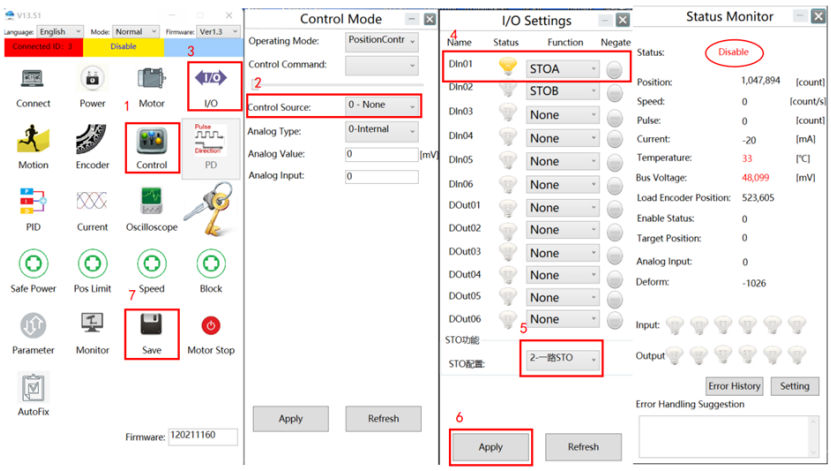

Figure 22-2 One STO branch circuit function configuration steps

22.1.2 Two STO Branch Circuits Function Configuration

As shown in Figure 22-3, Connect eTuner, enter "Control Mode" and select "0-None" in "Control Source". Then enter "I/O Settings" interface to set STO function configuration (pay attention to check status monitor interface. Only when it displays "Disable", can the function modification be allowed.)
Set DIn01 to "STOA", set DIn02 to "STOB", set STO configuration to "3- Two of STO", click apply and save in sequence. Wait about 3 seconds, it will be prompted that the save command is completed. Then STO two branch circuits configuration is completed.

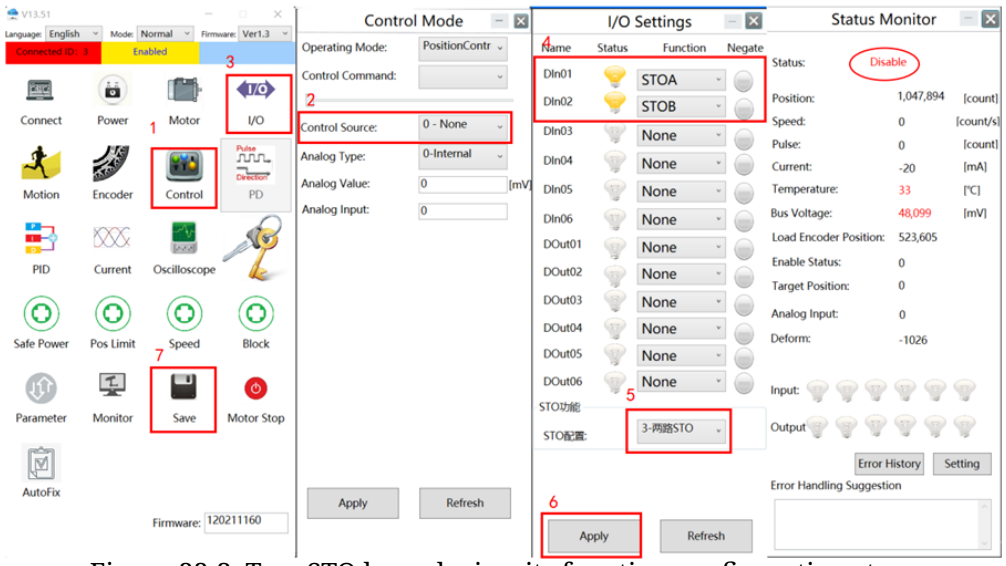

Figure 22-3 Two STO branch circuits function configuration steps

Chapter 23 Virtual Torque Sensor(VTS)

(1) The transmission equation of SWG under ideal conditions:

$$\theta_{out} = \frac{\theta_{in}}{m_G} \tag{23.1}$$

Symbol	Definition	Unit
θ_{out}	Angle of flexspline output shaft. Measured by encoder for output shaft, and the resolution is 19 bit.	$^\circ$, rad
θ_{in}	Angle of wave generator input shaft. Measured by encoder for motor, and the resolution is 17 bit.	$^\circ$, rad
m_G	SWG gear ratio.	N/A

(2) The actual transmission equation of SWG:

$$\theta_{out} + E_{out} = \frac{\theta_{in}}{m_G} + E_{in} \tag{23.2}$$

Symbol	Definition
E_{in}	The transmission error of input shaft.
E_{out}	Error caused by circular spline elastic deformation.

The error value is so small that it can be ignored.

$$E_{in} = E_{FED} + E_{WGD} + E_{ITG} + E_M \tag{23.3}$$

Symbol	Definition
E_{FED}	Error caused by flexspline elastic deformation.
E_{WGD}	Error caused by wave generator deformation.
E_{ITG}	Error caused by input teeth gap.
E_M	Error caused by manufacture.

When compared with E_{FED}, E_{WGD}, and E_{ITG}, the E_M is very small and can be ignored.
Define variable $\Delta\theta$ (let $\Delta\theta = E_{in}$, represented by the object dictionary 0x2241) represents the total torsional angle of the SWG.

$$\Delta\theta = (\theta_{out} \times m_G) - \theta_{in} \tag{23.4}$$

Symbol	Definition	Unit
θ_{in}	Angle of wave generator input shaft. Measured by encoder for motor, and the resolution is 17 bit.	Resolution
θ_{out}	Angle of flexspline output shaft. Measured by encoder for output shaft, and the resolution is 19 bit.	Resolution
$\Delta\theta$	Calculated using Formula 23.4, and the resolution is 17 bit.	Resolution

The sampling period of both encoders is 50 μs, and both $\Delta\theta$ (0x2241) and calculated torque value (0x3B69) are calculated immediately after the encoder samples. Therefore, the bandwidth of $\Delta\theta$ and calculated torque value mainly depends on the communication cycle of EtherCAT or CANopen for 0x2241 and 0x3B69.

Table 23-1 Dual Encoder Difference

Index	0x2241	Object	Variable	Name	Dual Encoder Difference ($\Delta\theta$)
Sub-index	**PDO Mapping**	**Read-write Operation**	**Data Format**	**Unit**	**Description**
0x00	TxPDO	Read Only	INT32	Resolution	Mapped to the dual encoder difference on the motor side, the resolution is 17 bits. Taking eRob80H100 as an example, the relationship between $\Delta\theta$ dual encoder difference and load end torque at standstill is shown in Figure 23-1

Table 23-2 Calculated Torque Value

Index	0x3B69	Object	Variable	Name	Calculated Torque Value
Sub-index	**PDO Mapping**	**Read-write Operation**	**Data Format**	**Unit**	**Description**
0x00	TxPDO	Read Only	INT32	mNm	Calculated torque value based on the dual encoder scheme. Only when the torque-sensor position is T.

Note: Installation without obeying requirements of mounting flange in output flange (for details, refer to Chapter 19) may cause output shaft deformation and cause the torque sensor cannot properly work even cause an irreversible damage.

The correlation between the difference value 0x2241h and the torque value 0x3B69h of the dual encoder can be obtained by combining the characteristics of the rigidity and hysteresis curve of the SWG, as shown in Figure 23-2.

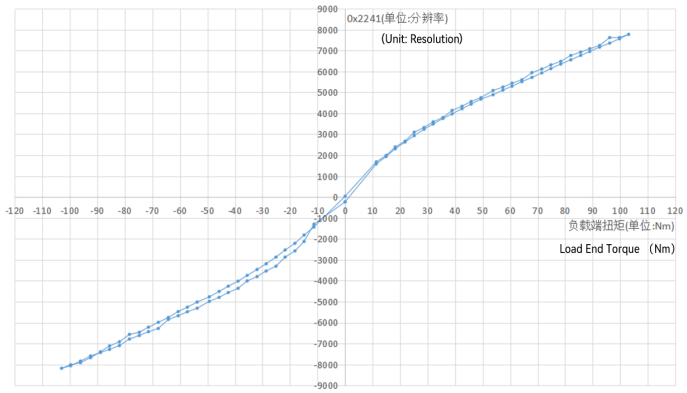

Figure 23-1 Relationship Curve Between Dual Encoder Difference and Load End Torque at Standstill

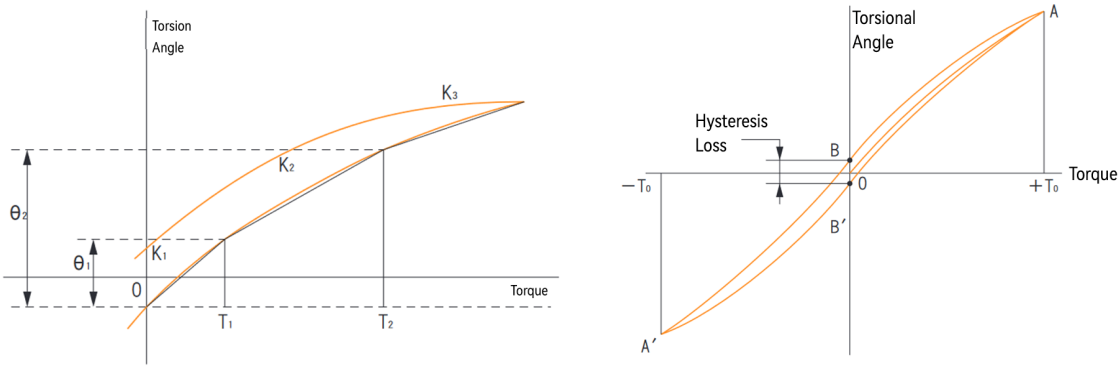

Figure 23-2 Hysteresis and Rigidity Curve of The Strain Wave Gear

Reference: *HarmonicDrive General Catalog.pdf*

Table 23-3 Dual Encoder Difference and Load End Torque Relationship Test Data Sheet at Standstill

Load End Torque (Nm)	Dual Encoder Difference (Avg.)	Load End Torque (Nm)	Dual Encoder Difference (Avg.)
0.000	-230	0.000	37
11.327	1583	-11.327	-1433
14.903	1935	-14.903	-1815
18.218	2305	-18.218	-2211
21.794	2629	-21.794	-2530
25.109	2935	-25.109	-2871
28.685	3240	-28.685	-3188
32.000	3490	-32.000	-3462
35.576	3756	-35.576	-3746
38.891	3977	-38.891	-4018
42.467	4220	-42.467	-4262
45.782	4439	-45.782	-4512
49.358	4680	-49.358	-4770
53.756	4888	-53.756	-5018
57.331	5109	-57.331	-5265
60.647	5299	-60.647	-5472
64.222	5512	-64.222	-5756
67.884	5716	-67.884	-5988
71.459	5931	-71.459	-6219
74.775	6137	-74.775	-6463
78.350	6353	-78.350	-6563
82.011	6556	-82.011	-6917
85.587	6766	-85.587	-7115
88.902	6955	-88.902	-7396
92.478	7165	-92.478	-7677
96.139	7357	-96.139	-7914
99.715	7565	-99.715	-8017
103.030	7773	-103.030	-8185
99.715	7620	-99.715	-8062
96.139	7620	-96.139	-7839
92.478	7244	-92.478	-7596
88.902	7086	-88.902	-7432
85.587	6926	-85.587	-7279
82.011	6766	-82.011	-7100
78.350	6481	-78.350	-6784
74.775	6314	-74.775	-6616
71.459	6115	-71.459	-6434
67.884	5945	-67.884	-6281
64.222	5602	-64.222	-5850
60.647	5439	-60.647	-5674
57.331	5254	-57.331	-5483
53.756	5092	-53.756	-5314
49.358	4747	-49.358	-4986
45.782	4566	-45.782	-4797
42.467	4337	-42.467	-4564
38.891	4141	-38.891	-4363
35.576	3801	-35.576	-4007
32.000	3595	-32.000	-3802
28.685	3324	-28.685	-3534
25.109	3097	-25.109	-3304
21.794	2671	-21.794	-2869
18.218	2392	-18.218	-2575
14.903	1985	-14.903	-2122
11.327	1678	-11.327	-1299

Chapter 24 Life of Rotary Actuator

The life of rotary actuator is determined by the lifetime of the SWG. Lifetime of the SWG depends on the life of wave generator bearing. It can be calculated by rotational speed and load torque just as with a general ball bearing lifetime calculation.

Table 24-1 Rotary Actuator Life

Reducer Type	Life	
	F type	H type
L_{10} (10% damage probability)	7,000 hr	10,000 hr
L_{50} (Average Lifetime)	35,000 hr	50,000 hr

Note: The life values in Table 24-1 apply at rated rotational speed and rated torque.

Calculation formula for life (L_h) by actual operation condition

$$L_h = L_n \times (\frac{T_r}{T_{avg}})^3 \times (\frac{n_t}{n_{avg}}) \quad (24.1)$$

Symbol	Definition
L_h	Life measured in hours.
L_n	Life of L_{10} or L_{50}.
T_r	Rated torque of the SWG.
T_{avg}	Average Load Torque on the SWG Output Side.
n_t	Motor rated rotational speed used for SWG rated-torque testing (2000RPM).
n_{avg}	Average SWG input / motor output rotational speed.

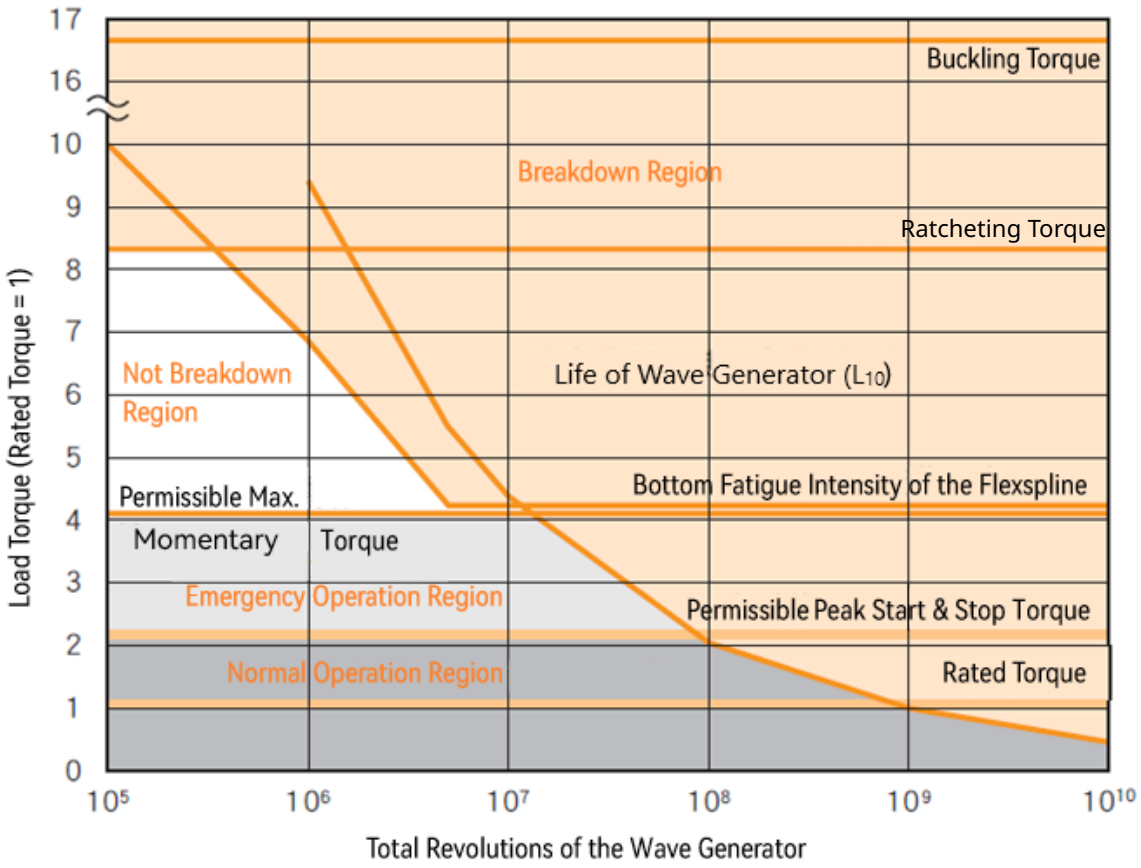

Figure 24-1 Relationship Between Strength and Lifetime of the Rotary Actuator

Reference: *HarmonicDrive General Catalog.pdf*

Note: Use eRob series rotary actuator within the range of "Normal operation area". Using it beyond "Normal operation area" may result in damaging eRob series rotary actuator earlier than usual. Use the values in the graph as reference values. Lubricant life such as for abrasion on the tooth surface is not taken into consideration in the graph described above.
The eRob110H HD[V6] is equipped with a HarmonicDrive gear reducer. Table 24-2 presents its durability validation data.

Table 24-2 eRob110H HD[V6] Durability Validation Data

Validation Item	Validation Result
Elevated Load Used for Validation	154.4 N·m
Accumulated Operating Time	Approx. 2,500 h
Equivalent Operating Time at Rated Conditions	Approx. 14,000 h
Validation Status	End-of-life criterion not yet reached.

Chapter 25 Pulse Direction Control

Software applicability: The PD switch, I/O steps and screenshots below describe eTuner. For eTunerII configuration and mode activation, see Section D.9. This chapter's pulse wiring, gearing and protocol instructions remain applicable.

eRob rotary actuator supports pulse direction control mode which can control the motion of eRob by inputting pulse signal and direction signal externally.

Note:

(1) The pulse-and-direction control interface is available only on EtherCAT configurations with communication-type position E.

(2) The wiring of pulse direction control mode refers to Figure 6-13 and Figure 6-14 in Section 6.5.

(3) The rotary actuator housing must be connected to protective earth (PE). Otherwise, the pulse-and-direction signals may become unstable and cause unintended motion. For the grounding method, refer to Section 6.6.3, "Module Housing Grounding," in this manual.

25.1 Parameter configuration of pulse direction control mode

Steps for Parameter Configuration of Pulse Direction Control Mode The steps for parameter configuration of pulse direction control mode are as shown in Figure 25-1.

(1) Connect eTuner and enter the "PD Set" interface where the user can monitor the number of pulses received by the eRob.

(2) Tick "Pulse direction control mode" to activate the function.

(3) Configure the "direction of pulse"

- "0"indicates pulse-direction positive logic: the motion direction of the eRob is the same as that of external input pulse.
- "1"indicates pulse-direction inverse logic : the motion direction of the eRob is opposite to that of external input pulse.

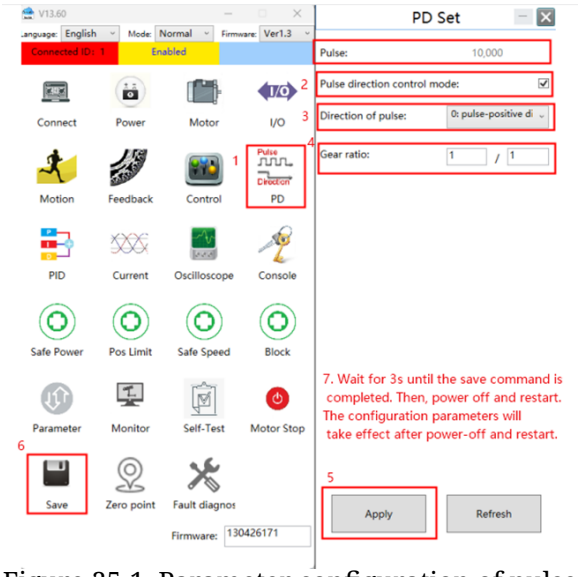

Figure 25-1 Parameter configuration of pulse direction control mode

(4) Configure Gear Ratio

$$N_{out} = p_{input} \times \frac{m_{PD}}{524288} \tag{25.1}$$

Symbol	Definition
N_{out}	The amount of eRob output rotation.
p_{input}	The amount of external input pulses.
m_{PD}	Configured electronic gear ratio for pulse-direction control.

The numerator and denominator of the gear ratio are configured as 1 by default, that is, 1 pulse is input from the outside, the eRob moves 1 encoder position (count). If the user wants to configure the external input of 1000 pulses to make the eRob rotates 1 circle, the gear ratio needs to be configured to 524288/1000.

(5) Click "Apply".
(6) Click "Save".
(7) Wait for 3s until the save command is completed. Then, power off and restart. The configuration parameters will take effect after power-off and restart.

Configure the I/O Port to Send Enable Command
Users can configure I/O port to send enable command in the "I/O settings" of eTuner. The setting steps are as shown in Figure 25-2.

(1) Connect the PC and open the "I/O settings" interface.
(2) Set "DIn03" to "Enable". Assign the "Enable" function to only one of DIn03, DIn04, DIn05, and DIn06.
(3) Tick "Inverse" of DIn03.
(4) Click "Apply".
(5) Click "Save".
(6) Wait for 3s until the save command is completed. Then, power off and restart. The configuration parameters will take effect after power-off and restart.

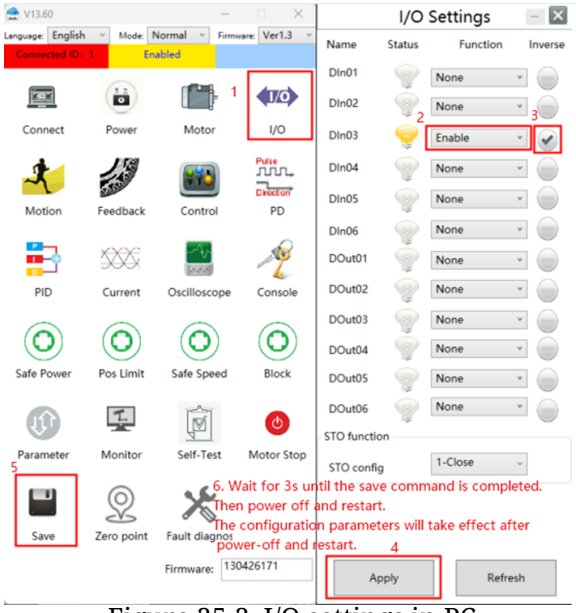

Figure 25-2 I/O settings in PC

25.2 Pulse direction motion control

After the parameter configuration of pulse direction control is completed, the eRob will be enabled automatically when powering on. At this time, send pulse direction signal to the eRob, the eRob will start to move while receiving the external pulse direction signal. The pulse direction control command is as shown in Table 25-1.

Table 25-1 Pulse direction command

Command	Pulse Direction Logic	Motor Positive Rotation	Motor Reverse Rotation
Pulse Direction Command	Positive Logic	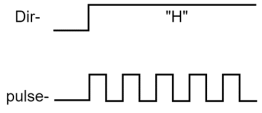	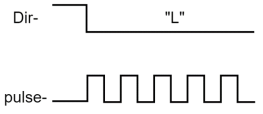
Pulse Direction Command	Inverse Logic	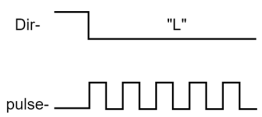	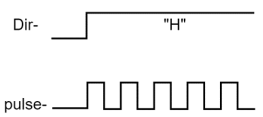

The user can control the motion position and speed of the eRob by adjusting the number and the frequency of external pulses sent. The target position of the eRob is determined by the number of received pulses and the configured electronic gear ratio, as described in Section 25.1. The motion speed of eRob is limited by the motion parameters, as shown in Figure 25-3a.

(1) When the target speed of the eRob is greater than the profile speed, the eRob operates at the profile speed.

(2) When the target speed of the eRob is less than the profile speed, the eRob operates at the target speed.

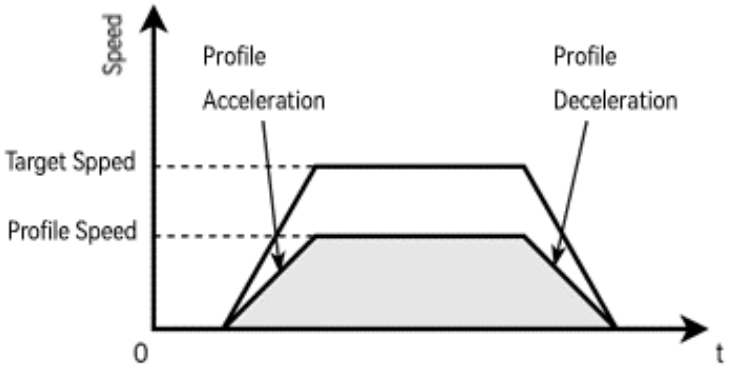

(a) Motion of the eRob is limited by motion configuration

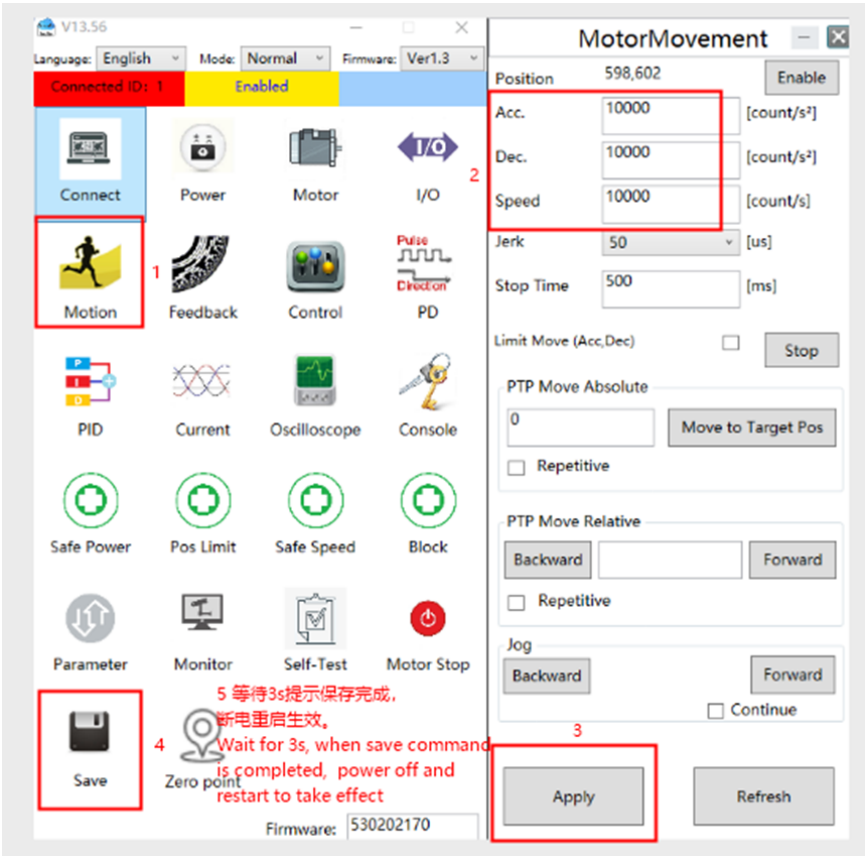

(b) Motion parameter configuration

Figure 25-3 Motion Related Illustration

The user can reduce the external pulse sending frequency or configure a greater profile speed so that the target speed of eRob is less than the profile speed, thereby making the eRob operate at the target speed. The motion parameter configuration is as shown in Figure 25-3b.

When using Pulse Direction control mode, the Output Shaft Actual Position can be determined via the CAN or RS485 communication interface:

(1) **CAN Interface**

The output shaft actual position can be determined by sending & receiving data messages via the CAN communication interface using CAN-custom communication protocol. For detailed instructions, please refer to the eRunner User Manual Chapter 7

Take servo ID=1 as an example.

Table 25-2 CAN-Custom Messages for Reading Output Shaft Actual Position

COB-ID	Message	Description
641	00 02	Read output shaft actual position
5C1	00 15 8A 06 3E	Return output shaft actual position

(2) **RS485 Interface**

The output shaft actual position can be determined by sending & receiving data messages via the RS485 communication interface using Modbus communication protocol. For detailed instructions, please refer to the eRob Modbus RTU User Manual

Take servo ID=1 as an example.

Table 25-3 Modbus Messages for Reading Output Shaft Actual Position

Direction	Message	Comment
Send→	01 03 00 66 00 02 24 14	Read output shaft actual position
Receive←	01 03 04 00 15 8A 06 0C 95	Return output shaft actual position

Chapter 26 Output Characteristic

26.1 eRob Motor Current, Output Torque, Rotational Speed Curve

This plot highlights the eRob's ***motor current*** draw in relation to the ***output torque*** and ***rotational speed***. It demonstrates how the electrical demand varies as the actuator operates under different mechanical loads and speeds.
This plot provides valuable insights into the actuator's electrical and mechanical performance under varying conditions.
NOTE: The motor current is the actual motor current. For details, please refer to Table 26-3 *Motor actual current (0x6078)*.

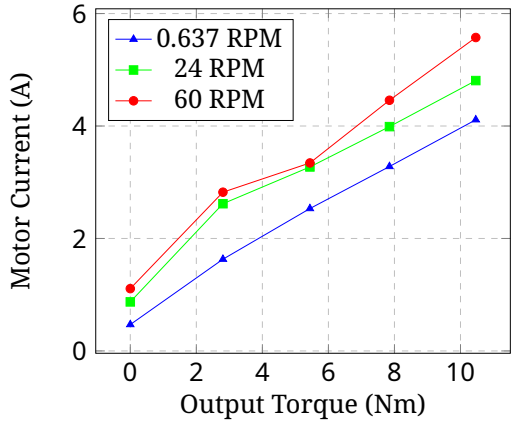

(a) Plot

Motor Current \ Output Torque / Rotational Speed	0 Nm	2.806 Nm	5.440 Nm	7.849 Nm	10.463 Nm
0.637 RPM	0.469 A (39 °C)	1.631 A (41 °C)	2.532 A (39 °C)	3.280 A (36 °C)	4.111 A (40 °C)
24 RPM	0.872 A (40 °C)	2.618 A (42 °C)	3.272 A (38 °C)	3.989 A (37 °C)	4.808 A (41 °C)
60 RPM	1.108 A (40 °C)	2.823 A (37 °C)	3.343 A (41 °C)	4.458 A (39 °C)	5.574 A (43 °C)

(b) Parameter

Figure 26-1 eRob70H50I Motor Current, Output Torque, Rotational Speed Curve

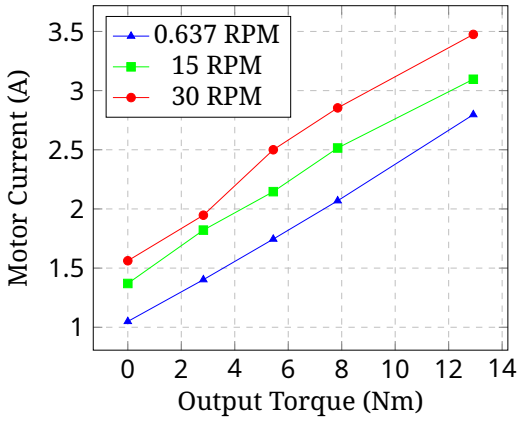

(a) Plot

Motor Current \ Output Torque / Rotational Speed	0 Nm	2.826 Nm	5.440 Nm	7.849 Nm	12.922 Nm
0.637 RPM	1.049 A (37 °C)	1.402 A (36 °C)	1.745 A (36 °C)	2.069 A (36 °C)	2.797 A (36 °C)
15 RPM	1.370 A (40 °C)	1.821 A (39 °C)	2.146 A (38 °C)	2.515 A (39 °C)	3.096 A (41 °C)
30 RPM	1.562 A (39 °C)	1.947 A (36 °C)	2.500 A (35 °C)	2.854 A (35 °C)	3.475 A (38 °C)

(b) Parameter

Figure 26-2 eRob70H100I Motor Current, Output Torque, Rotational Speed Curve

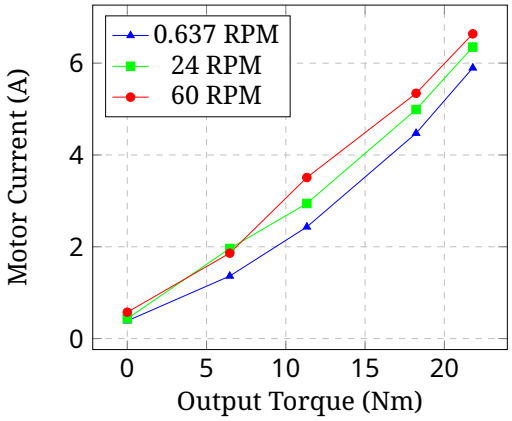

(a) Plot

Motor Current / Output Torque / Rotational Speed	0 Nm	6.465 Nm	11.327 Nm	18.218 Nm	21.794 Nm
0.637 RPM	0.386 A (40 °C)	1.362 A (37 °C)	2.432 A (42 °C)	4.473 A (40 °C)	5.896 A (38 °C)
24 RPM	0.435 A (39 °C)	1.963 A (38 °C)	2.943 A (36 °C)	4.990 A (40 °C)	6.350 A (38 °C)
60 RPM	0.574 A (40 °C)	1.861 A (40 °C)	3.508 A (38 °C)	5.343 A (41 °C)	6.639 A (40 °C)

(b) Parameter

Figure 26-3 eRob80H50I Motor Current, Output Torque, Rotational Speed Curve

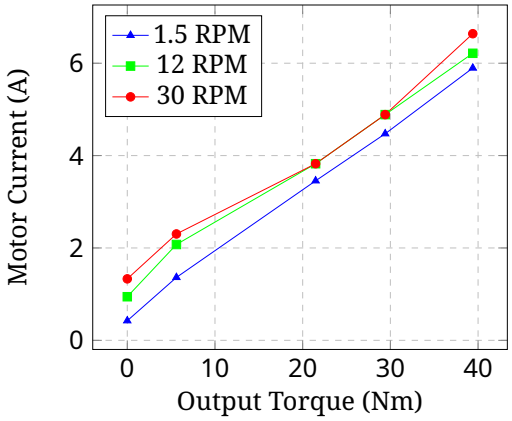

(a) Plot

Motor Current / Output Torque / Rotational Speed	0 Nm	5.604 Nm	21.475 Nm	29.409 Nm	39.398 Nm
1.5 RPM	0.424 A (38 °C)	1.362 A (41 °C)	3.454 A (38 °C)	4.473 A (40 °C)	5.896 A (41 °C)
12 RPM	0.944 A (40 °C)	2.075 A (38 °C)	3.824 A (42 °C)	4.887 A (42 °C)	6.215 A (40 °C)
30 RPM	1.331 A (41 °C)	2.303 A (39 °C)	3.824 A (44 °C)	4.887 A (42 °C)	6.639 A (40 °C)

(b) Parameter

Figure 26-4 eRob80H100I Motor Current, Output Torque, Rotational Speed Curve

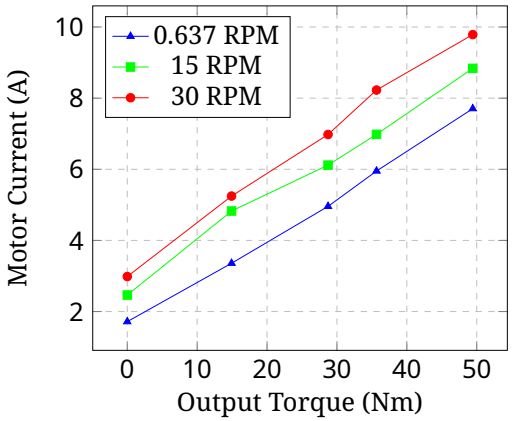

(a) Plot

Motor Current / Output Torque / Rotational Speed	0 Nm	14.923 Nm	28.726 Nm	35.664 Nm	49.437 Nm
0.637 RPM	1.716 A (44 °C)	3.358 A (42 °C)	4.957 A (44 °C)	5.951 A (39 °C)	7.705 A (43 °C)
15 RPM	2.464 A (45 °C)	4.826 A (42 °C)	6.117 A (44 °C)	6.982 A (40 °C)	8.838 A (40 °C)
30 RPM	2.984 A (44 °C)	5.247 A (42 °C)	6.978 A (44 °C)	8.228 A (39 °C)	9.787 A (38 °C)

(b) Parameter

Figure 26-5 eRob90H100I Motor Current, Output Torque, Rotational Speed Curve

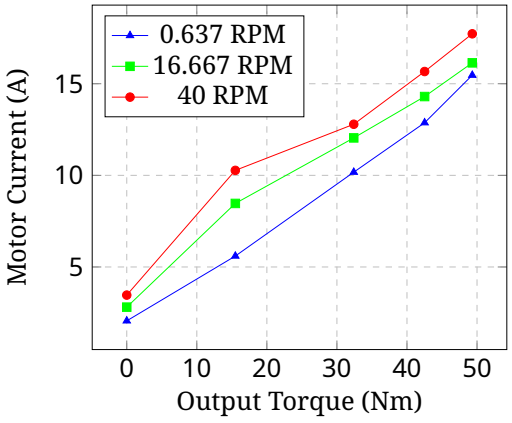

(a) Plot

Motor Current / Output Torque / Rotational Speed	0 Nm	15.498 Nm	32.404 Nm	42.519 Nm	49.320 Nm
0.637 RPM	2.059 A (39 °C)	5.596 A (39 °C)	10.173 A (40 °C)	12.871 A (41 °C)	15.466 A (41 °C)
16.667 RPM	2.808 A (39 °C)	8.468 A (39 °C)	12.044 A (41 °C)	14.301 A (42 °C)	16.140 A (43 °C)
40 RPM	3.465 A (40 °C)	10.272 A (38 °C)	12.789 A (39 °C)	15.667 A (40 °C)	17.725 A (42 °C)

(b) Parameter

Figure 26-6 eRob110H50I Motor Current, Output Torque, Rotational Speed Curve

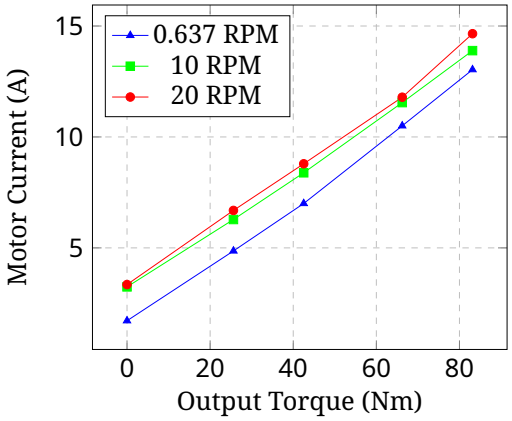

(a) Plot

Motor Current / Output Torque / Rotational Speed	0 Nm	25.609 Nm	42.519 Nm	66.222 Nm	83.142 Nm
0.637 RPM	1.716 A (35 °C)	4.862 A (35 °C)	7.001 A (37 °C)	10.501 A (40 °C)	13.033 A (39 °C)
10 RPM	3.243 A (38 °C)	6.279 A (36 °C)	8.385 A (38 °C)	11.548 A (39 °C)	13.890 A (41 °C)
20 RPM	3.347 A (41 °C)	6.688 A (36 °C)	8.790 A (38 °C)	11.791 A (40 °C)	14.653 A (41 °C)

(b) Parameter

Figure 26-7 eRob110H100I Motor Current, Output Torque, Rotational Speed Curve

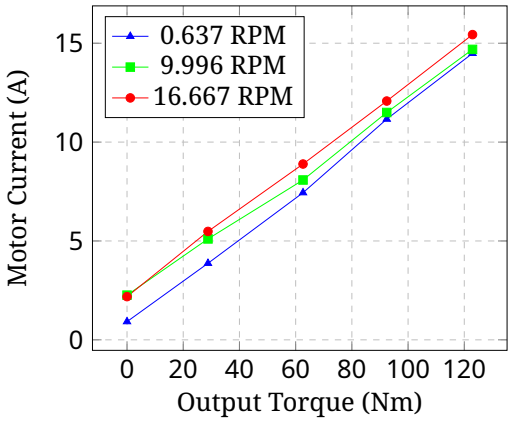

(a) Plot

Motor Current / Output Torque / Rotational Speed	0 Nm	28.803 Nm	62.621 Nm	92.407 Nm	122.929 Nm
0.637 RPM	0.920 A (38 °C)	3.870 A (40 °C)	7.440 A (38 °C)	11.161 A (40 °C)	14.488 A (40 °C)
9.996 RPM	2.260 A (41 °C)	5.103 A (39 °C)	8.083 A (40 °C)	11.497 A (42 °C)	14.688 A (39 °C)
16.667 RPM	2.185 A (41 °C)	5.482 A (39 °C)	8.891 A (41 °C)	12.076 A (42 °C)	15.436 A (38 °C)

(b) Parameter

Figure 26-8 eRob110H120I Motor Current, Output Torque, Rotational Speed Curve

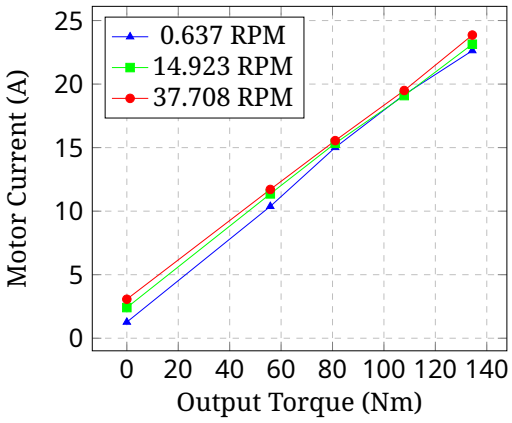

(a) Plot

Motor Current \ Output Torque / Rotational Speed	0 Nm	55.804 Nm	81.043 Nm	107.886 Nm	134.383 Nm
0.637 RPM	1.269 A (41 °C)	10.377 A (37 °C)	15.012 A (41 °C)	19.168 A (42 °C)	22.632 A (39 °C)
14.923 RPM	2.412 A (40 °C)	11.359 A (38 °C)	15.337 A (43 °C)	19.094 A (42 °C)	23.137 A (38 °C)
37.708 RPM	3.068 A (40 °C)	11.708 A (40 °C)	15.550 A (43 °C)	19.494 A (41 °C)	23.858 A (39 °C)

(b) Parameter

Figure 26-9 eRob142H50I Motor Current, Output Torque, Rotational Speed Curve

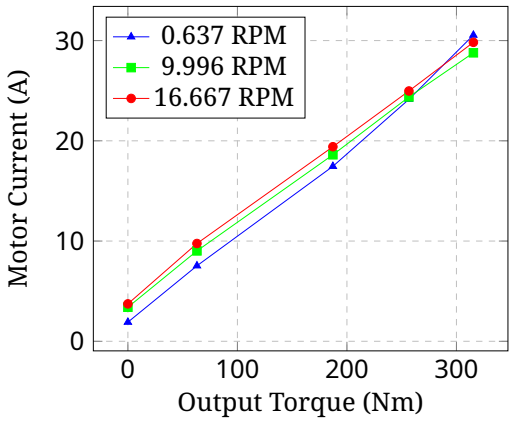

(a) Plot

Motor Current \ Output Torque / Rotational Speed	0 Nm	63.059 Nm	187.186 Nm	256.616 Nm	315.476 Nm
0.637 RPM	1.908 A (36 °C)	7.531 A (41 °C)	17.455 A (42 °C)	24.139 A (40 °C)	30.545 A (42 °C)
9.996 RPM	3.399 A (38 °C)	9.018 A (40 °C)	18.606 A (40 °C)	24.374 A (43 °C)	28.779 A (40 °C)
16.667 RPM	3.734 A (38 °C)	9.755 A (40 °C)	19.410 A (39 °C)	24.971 A (41 °C)	29.825 A (40 °C)

(b) Parameter

Figure 26-10 eRob142H120I Motor Current, Output Torque, Rotational Speed Curve

The transfer function block diagram of motor current to output torque is as shown in Figure 26-11.

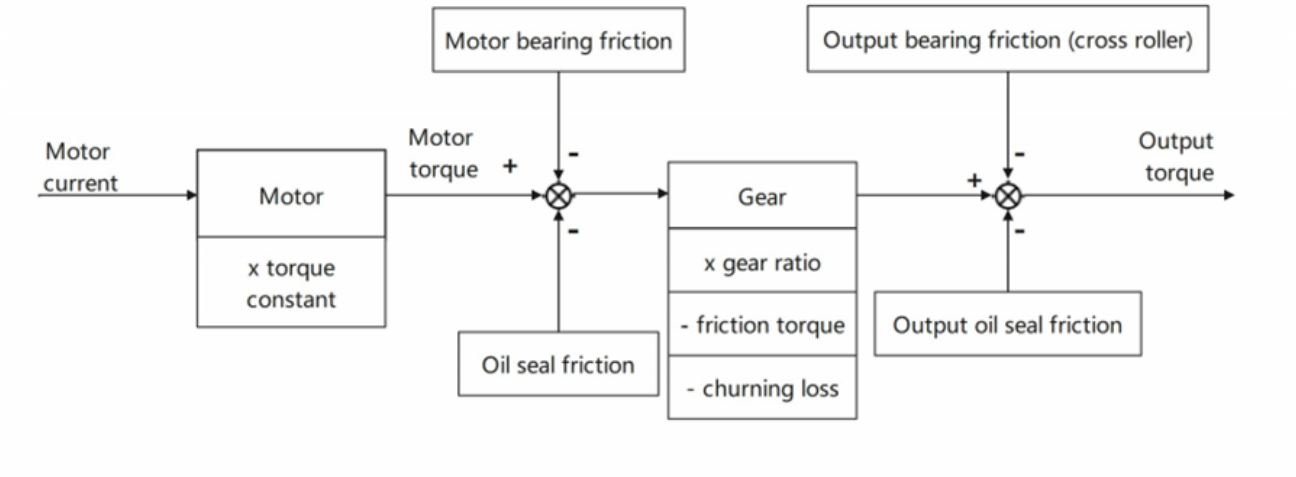

Figure 26-11 Transfer function block diagram of motor current to output torque

Therefore, the motor needs sufficient initial current to obtain the output torque.

Meanwhile, all friction torques have different dynamic friction and static friction.

The contact stress of sealing components is different at different temperature (The rigidity of rubber components changes).

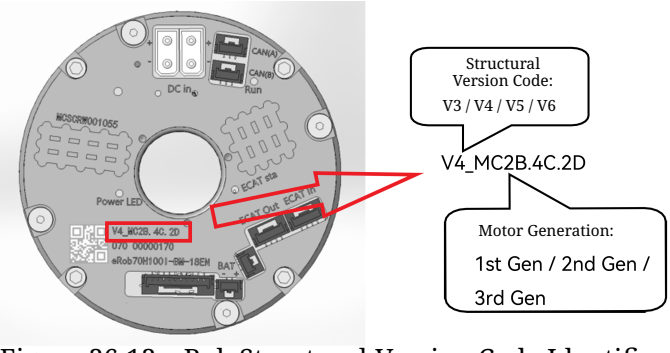

Figure 26-12 eRob Structural-Version Code Identification

Temperature also causes differences in the viscosity coefficient of the grease. Thermal expansion and contraction change in size, the higher the temperature, the lower the torque constant of the motor.

Inherent tolerances of the component sizes create different contact stresses at the seal. The viscosity coefficient is the same, the churning loss is nearly proportional to the square of the rotational speed.

Under the combined effect of the above factors, the transfer function of the SWG is not an ideal lossless model, and the relationship between the motor current and the output torque is also nonlinear.

On the whole, when the load is equal, the lower the temperature, the higher the speed, and the more current the motor needs.

26.2 eRob Rotary Actuator Motor Parameter

26.2.1 eRob Structural-Version Code Identification

Read the structural-version code on the product label as shown in Figure 26-12 and select the corresponding motor parameters. If the label is unclear or cannot be matched to the table, provide the complete model and serial number to technical support.

26.2.2 Motor Parameter

Software applicability: In eTunerII, the continuous-current entry is Device parameters → Safe power → Continuous current; see Section D.3. The product values and applicable conditions in the table remain unchanged.

Table 26-1 eRob Rotary Actuator Motor Parameter Sheet

Series Code / Structural Code / Motor Spec.	eRob70F	eRob70		eRob80F	eRob80		eRob90		eRob110			eRob142		eRob170	
	V3_MC2	V3_MC1	V4_MC2	V4_MC2	V3_MC1	V4_MC2 V5_MC2	V3_MC1	V3_MC2	V3_MC1	V4_MC2	V6_MC2	V3_MC1	V4_MC2	V3_MC1	V3_MC2
№ of poles	16	10	16	16	10	16	10	16	10	16	16	10	10	10	10
DC Link Voltage $U_{DC,\ motor}$ (DC Link)	48	48	48	48	48	48	48	48	48	48	48	48	48	48	48
Rated Power $P_{r,\ motor}$ (W)	75	100	100	126	200	146	400	293	750	750	723	1000	1000	1000	1000
Rated Torque $T_{r,\ motor}$ (Nm)	0.24	0.32	0.32	0.4	0.64	0.45	1.27	0.85	2.4	2.39	2.3	4.78	4.78	4.78	4.78
Rated Speed $n_{r,\ motor}$ (RPM)	3000	3000	3000	3000	3000	3100	3000	3300	2000	3000	3000	2000	2000	2000	2000
Rated Current $I_{r,\ motor}$ (A)	1.91	3.3	2.55	3.6	6.9	3.4	11	6.7	20	18.6	18.9	26	22	26	22
Maximum Torque $T_{m,\ motor}$ ($N \cdot m$)	0.72	0.96	0.96	1.2	1.92	1.25	3.81	2.55	7.2	7.17	6	15	14.3	15	14.3
Maximum Current $I_{m,\ motor}$ (A)	5.9	11	7.8	10.8	16.8	10.88	29	21.44	40	61	50	56	71	56	71
Resistance line-line $R_{L,\ motor}$ (Ω)(±10%)	3.87	1.75	2	0.83	0.7	0.76	0.22	0.31	0.119	0.093	0.084	0.069	0.059	0.069	0.059
Inductance line-line $L_{L,\ motor}$ (mH)(±20%)	2.54	2.5	2.46	1.362	1.362	1.32	0.6	0.86	0.2	0.2	0.16	0.37	0.38	0.37	0.38
Voltage Constant $K_{e,\ motor}$ (V/kRPM)(±5%)	8	8.42	8.3	8.36	8.36	8.1	8.43	8.3	8.65	8	8.1	12.2	13.5	12.2	13.5
Torque Constant $K_{T,\ motor}$ (Nm/A)	0.134	0.075	0.132	0.126	0.101	0.134	0.088	0.14	0.112	0.132	0.134	0.153	0.22	0.153	0.22

Table 26-1A. eRob70F Motor Parameters

Parameter	V4_MC2B.EX.XX	Tolerance
Number of poles	16	
DC link voltage (V)	48	
Rated power (W)	75	
Rated torque (N·m)	0.24	
Rated speed (r/min)	3000	
Rated current (A)	1.91	
Maximum torque (N·m)	0.72	
Maximum current (A)	5.9	
Continuous stall torque (N·m)	0.27	
Continuous stall current (A)	2.15	
Line resistance R (Ω)	2.59	±10%
Closed-circuit inductance L (mH)	2.07	±20%
Back-EMF constant Ke (V/krpm)	7.24	±5%
Torque constant Kt (N·m/A)	0.12	

NOTE: Please note that the motor parameters shown in Table 26-1 are the factory parameters of the motor. The rated torque of the motor is not equal to the rated torque of the module. The rated torque value of the motor is suited for general robot model calculation use only. The rated torque of the eRob module is based on the rated torque of the SWG gearbox. These two values (eRob module rated torque & motor rated torque) are not equal, and for the rated torque of the eRob module, please refer to Section 2.2.

Furthermore, it is important to understand that the rated current in the driver does not directly correspond to the rated torque of the module. The rated current in the driver is set based on the allowable heat capacity of the entire module.

The calculation formula of eRob torque constant (Nm/A) and output torque (Nm) :

(1) eRob Torque Constant (The transmission efficiency is usually 50%~70%; see Figure 26-13.)

$$K_{T,\ eRob} = K_{T,\ motor} \times m_G \times \eta_t \tag{26.1}$$

Symbol	Definition
$K_{T,\ eRob}$	The eRob module torque constant.
$K_{T,\ motor}$	The motor torque constant. (as shown in Table 26-1).
m_G	SWG Gear Ratio. (as shown in Table 2-1).
η_t	The efficiency of SWG transmission. (as shown in Figure 26-13).

(2) eRob Output Torque (The actual motor current used in this calculation can be obtained from object dictionary 0x6078; see Table 26-3.)

$$T_{out} = K_{T,\ eRob} \times I_{a,\ motor} \tag{26.2}$$

Symbol	Definition
T_{out}	The eRob output torque.
$K_{T,\ eRob}$	The eRob module torque constant.
$I_{a,\ motor}$	The actual current input of motor.

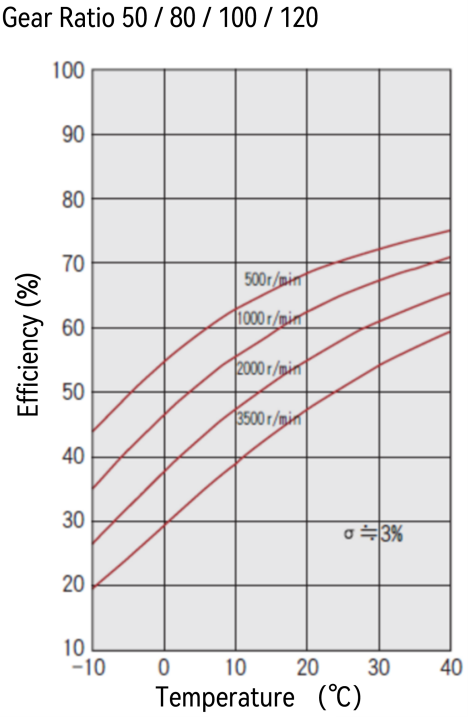

Figure 26-13 Efficiency at Rated Torque

Table 26-3 Motor Actual Current (0x6078)

Index	0x6078	Object	Variable	Name	Motor Actual Current
Sub-index	**PDO Mapping**	**Read-write Operation**	**Data Format**	**Unit**	**Description**
0x00	TxPDO	Read Only	INT16	1‰	The motor actual current is the value obtained from the sampled instantaneous three-phase motor currents. It is displayed as a permillage of the rated current (obtained from object dictionary 0x6075). $I_{motor\ actual} = 0x6078\ value \times \frac{(0x6075\ value)}{1000}$

Table 26-4 Rated Current (0x6075)

Index	0x6075	Object	Variable	Name	Rated Current
Sub-index	**PDO Mapping**	**Read-write Operation**	**Data Format**	**Unit**	**Description**
0x00	NO	Read/Write	UDINT32	mA	This object index corresponds to the "Continuous current" in "Safe Power" interface in eTuner.

26.3 eRob Motion Range

The following plots show output torque versus rotational speed. The dashed boundary indicates the continuous operating range; the solid boundary indicates the acceleration and deceleration operating range.

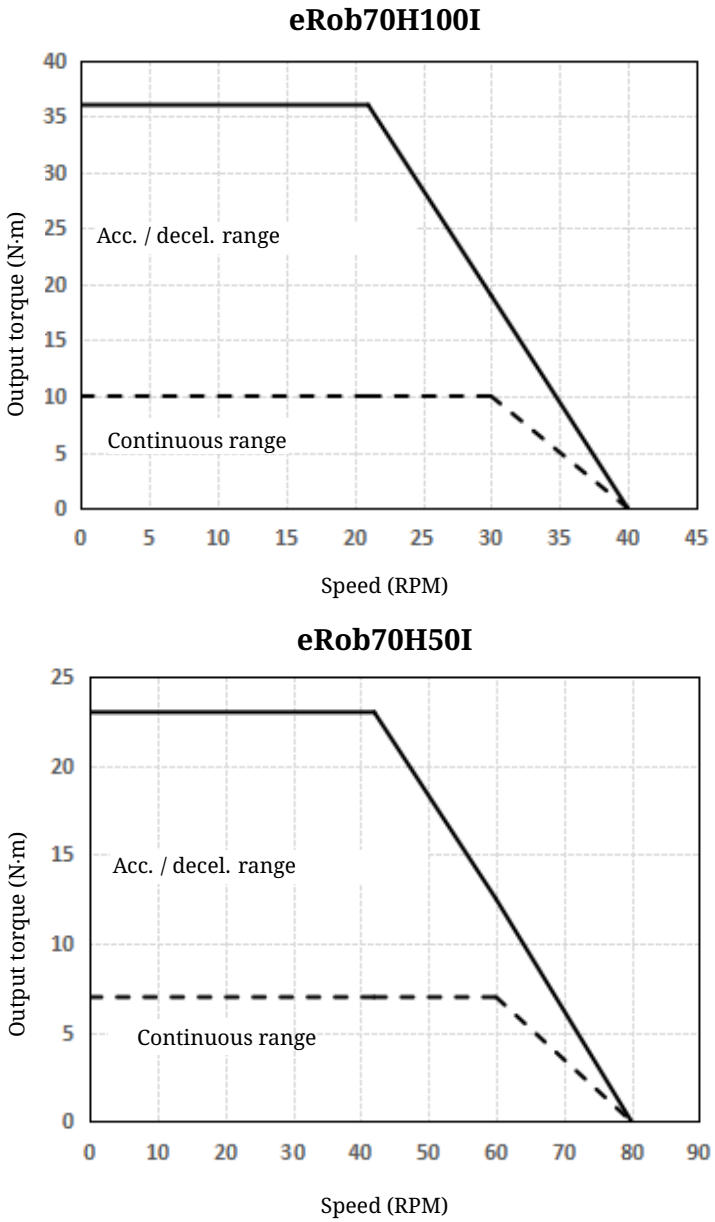

Figure 26-14 Output torque-speed operating ranges for eRob70H100I and eRob70H50I.

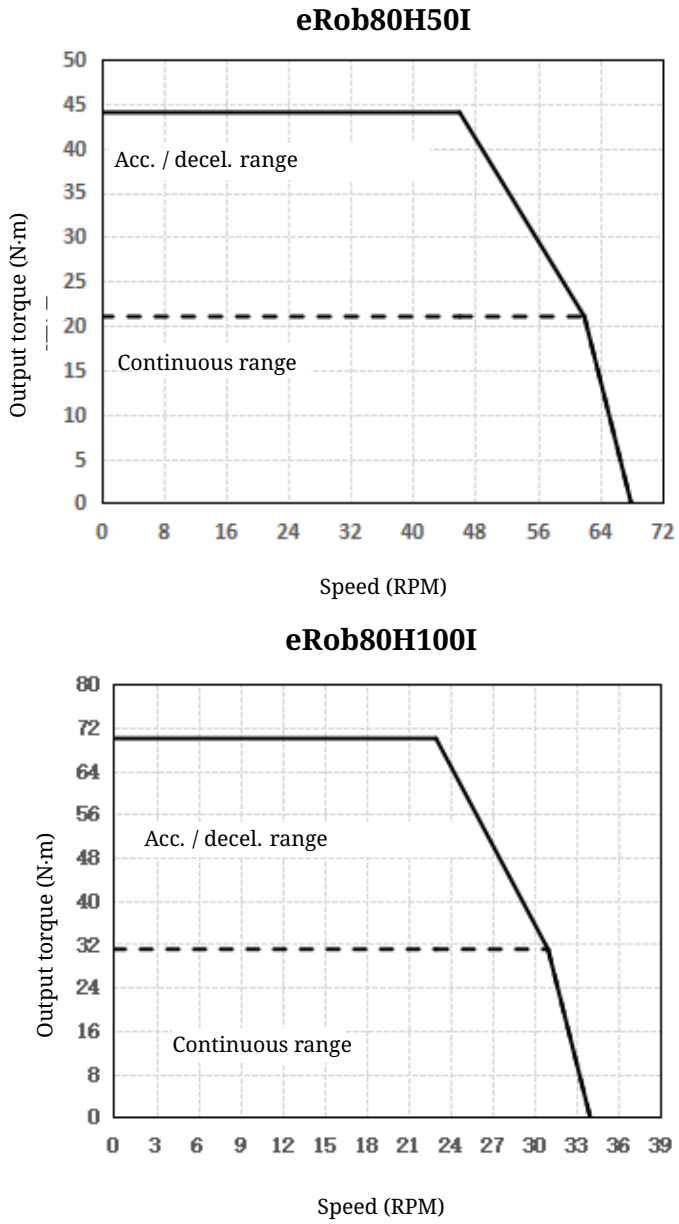

Figure 26-15 Output torque-speed operating ranges for eRob80H50I and eRob80H100I.

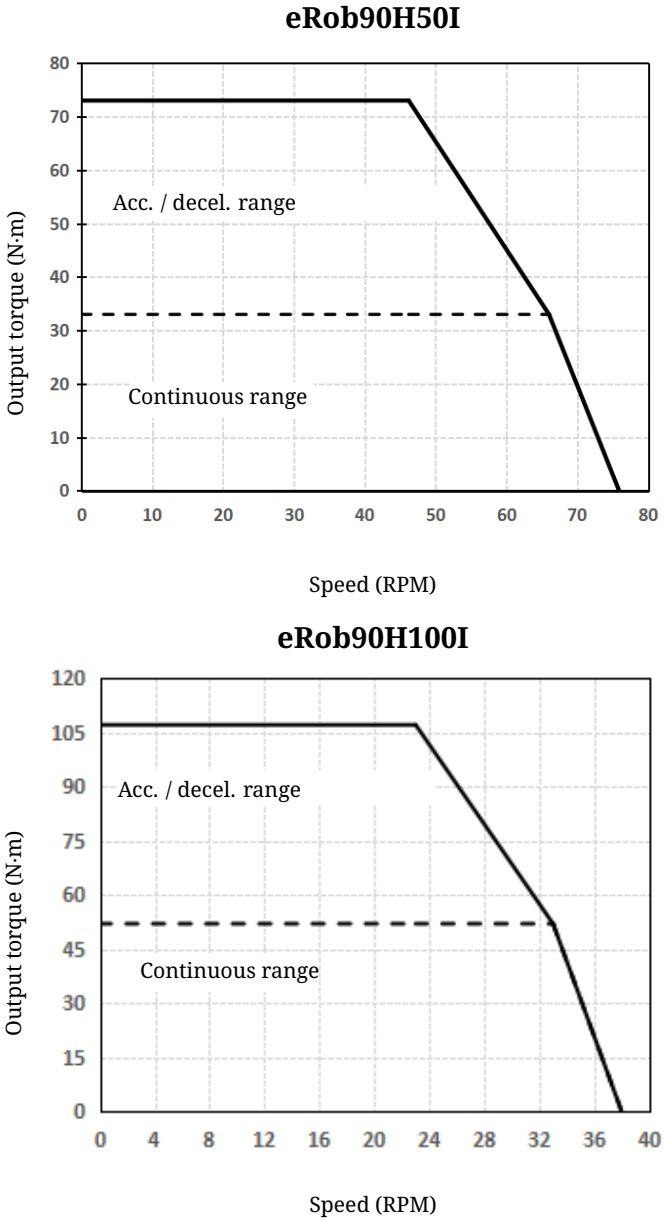

Figure 26-16 Output torque-speed operating ranges for eRob90H50I and eRob90H100I.

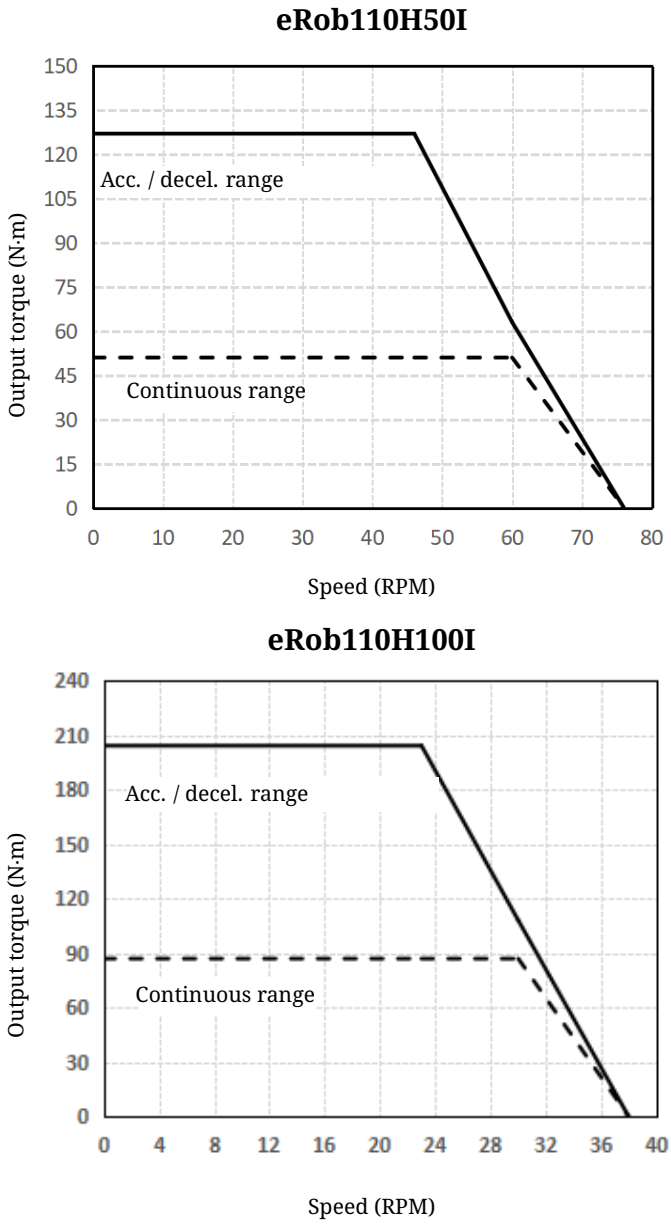

Figure 26-17 Output torque-speed operating ranges for eRob110H50I and eRob110H100I.

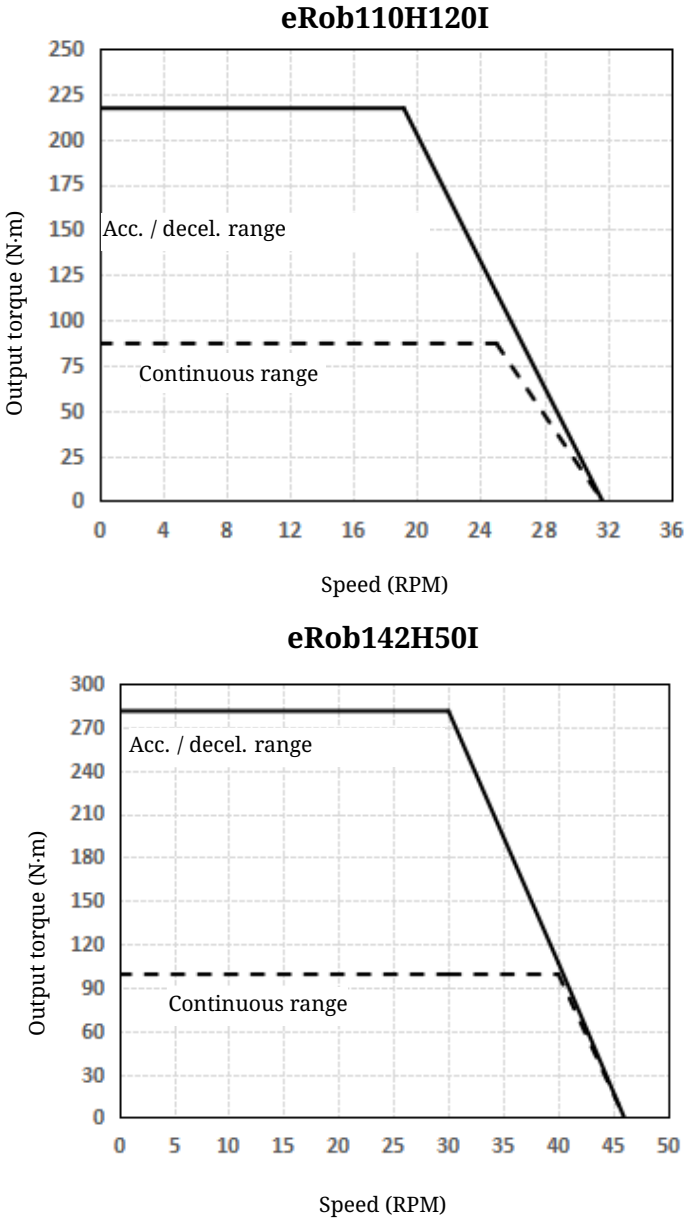

Figure 26-18 Output torque-speed operating ranges for eRob110H120I and eRob142H50I.

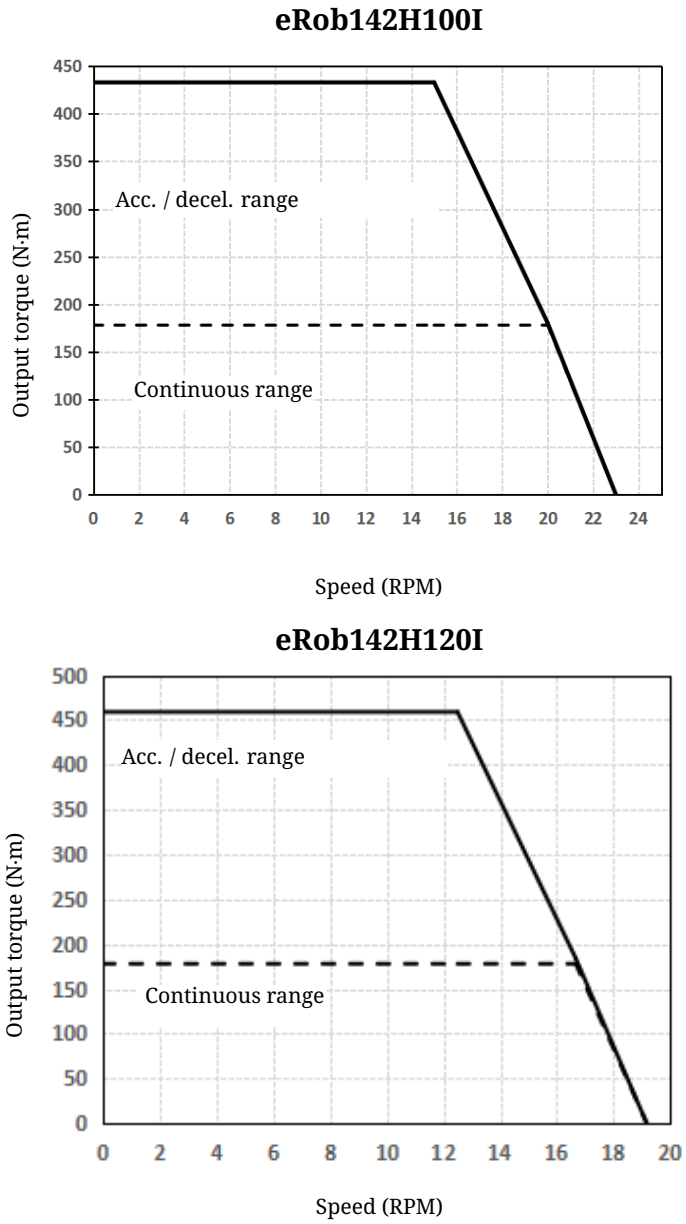

Figure 26-19 Output torque-speed operating ranges for eRob142H100I and eRob142H120I.

26.4 eRob Bus Current, Output Torque, Rotational Speed Curves

These plots highlight the eRob's ***bus current*** in relation to the ***output torque*** and ***rotational speed***. They demonstrate how the electrical input varies as the actuator operates under different mechanical loads and speeds.
These plots provide valuable insights into the actuator's efficiency and performance under varying electrical and mechanical conditions.

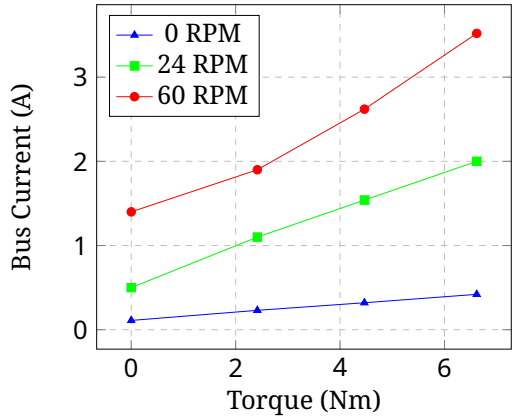

(a) Plot

Bus Current / Output Torque / Rotational Speed	0 Nm	2.415 Nm	4.466 Nm	6.617 Nm
0 RPM	0.11 A (39 °C)	0.23 A (41 °C)	0.32 A (39 °C)	0.42 A (38 °C)
24 RPM	0.50 A (40 °C)	1.10 A (42 °C)	1.54 A (38 °C)	2.00 A (37 °C)
60 RPM	1.40 A (40 °C)	1.90 A (37 °C)	2.62 A (41 °C)	3.52 A (39 °C)

(b) Parameter

Figure 26-20 eRob70H50I Bus Current, Output Torque, Rotational Speed Curve

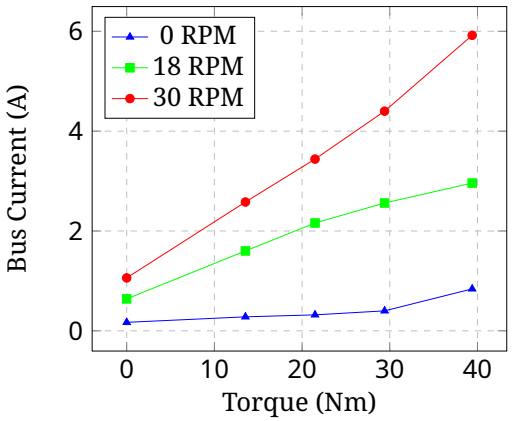

(a) Plot

Bus Current / Output Torque / Rotational Speed	0 Nm	13.539 Nm	21.475 Nm	29.409 Nm	39.398 Nm
0 RPM	0.17 A (38 °C)	0.28 A (41 °C)	0.32 A (38 °C)	0.40 A (40 °C)	0.84 A (41 °C)
18 RPM	0.64 A (40 °C)	1.60 A (38 °C)	2.16 A (42 °C)	2.56 A (42 °C)	2.96 A (40 °C)
30 RPM	1.06 A (41 °C)	2.58 A (39 °C)	3.44 A (44 °C)	4.40 A (42 °C)	5.92 A (40 °C)

(b) Parameter

Figure 26-21 eRob80H100I Bus Current, Output Torque, Rotational Speed Curve

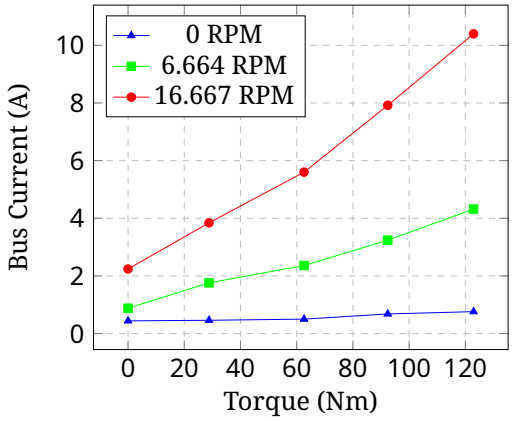

(a) Plot

Bus Current \ Output Torque / Rotational Speed	0 Nm	28.803 Nm	62.621 Nm	92.407 Nm	122.929 Nm
0 RPM	0.44 A (35 °C)	0.46 A (35 °C)	0.50 A (37 °C)	0.68 A (40 °C)	0.76 A (39 °C)
6.664 RPM	0.88 A (38 °C)	1.76 A (36 °C)	2.36 A (38 °C)	3.24 A (39 °C)	4.32 A (41 °C)
16.667 RPM	2.24 A (41 °C)	3.84 A (36 °C)	5.60 A (38 °C)	7.92 A (40 °C)	10.40 A (41 °C)

(b) Parameter

Figure 26-22 eRob110H120I Bus Current, Output Torque, Rotational Speed Curve

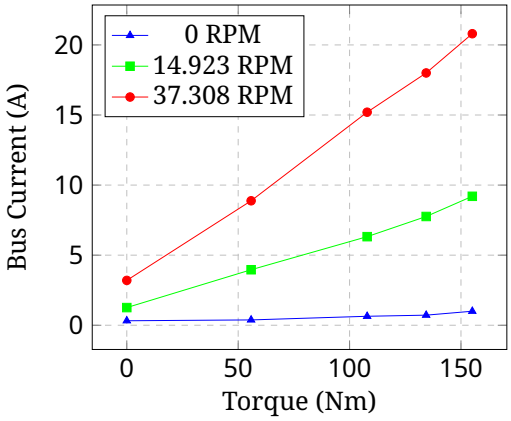

(a) Plot

Bus Current \ Output Torque / Rotational Speed	0 Nm	55.804 Nm	107.886 Nm	134.383 Nm	155.084 Nm
0 RPM	0.32 A (41 °C)	0.38 A (37 °C)	0.64 A (41 °C)	0.72 A (42 °C)	1.00 A (39 °C)
14.923 RPM	1.26 A (40 °C)	3.96 A (38 °C)	6.32 A (43 °C)	7.76 A (42 °C)	9.20 A (38 °C)
37.308 RPM	3.20 A (40 °C)	8.88 A (40 °C)	15.20 A (43 °C)	18.00 A (41 °C)	20.80 A (39 °C)

(b) Parameter

Figure 26-23 eRob142H50I Bus Current, Output Torque, Rotational Speed Curve

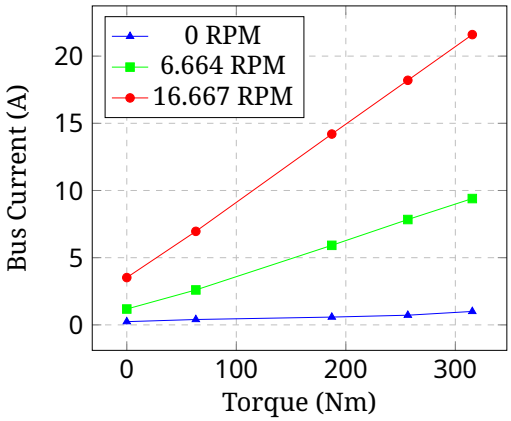

(a) Plot

Bus Current \ Output Torque / Rotational Speed	0 Nm	63.059 Nm	187.186 Nm	256.616 Nm	315.476 Nm
0 RPM	0.24 A (36 °C)	0.40 A (41 °C)	0.58 A (42 °C)	0.72 A (40 °C)	1.00 A (42 °C)
6.664 RPM	1.18 A (38 °C)	2.60 A (40 °C)	5.92 A (40 °C)	7.84 A (43 °C)	9.40 A (40 °C)
16.667 RPM	3.52 A (38 °C)	6.96 A (40 °C)	14.20 A (39 °C)	18.20 A (41 °C)	21.60 A (40 °C)

(b) Parameter

Figure 26-24 eRob142H120I Bus Current, Output Torque, Rotational Speed Curve

Chapter 27 Troubleshooting Instruction

Table 27-1 Troubleshooting and Solutions

Problem Classification	Alarm Prompt or Phenomenon	Possible Causes	Solutions
CAN Communication Abnormality	RUN LED indicator does not light up	1. Incorrect power supply used. 2. Excessive voltage at the eRob's 48V power input, causing hardware failure.	1. Use a 48VDC power supply and pay attention to the polarity. 2. It is recommended to use our proprietary ePower power supply.
CAN Communication Abnormality	RUN LED indicator is normal, but clicking the "Connection Test" button in the PC prompts: please check if the driver is powered on.	1. The CAN interface of the eRob is not properly connected with the USBCAN "eRob to PC Connector". 2. Strong current is fed into the CAN interface, causing partial components of the CAN interface to burn out and communication to be interrupted.	1. Check the CAN wiring order to ensure a good connection. 2. Check the resistance of the CAN interface.
CAN Communication Abnormality	The PC connection test recognizes fewer CAN IDs than the actual number of connections.	1. There are slave devices on the CAN bus with the same CAN ID.	1. Connect each axis separately, reset the CAN IDs to ensure unique IDs.
CAN Communication Abnormality	After connecting to the PC, the data displayed on the status monitoring interface fluctuates abnormally.	1. There are slave devices on the CAN bus with the same CAN ID. 2. The wiring of the eRob's CAN port does not match the wiring of the USBCAN "eRob to PC Connector"'s port.	1. Connect each axis separately, reset the CAN IDs to ensure unique IDs. 2. Check the wiring of the eRob's CAN port with the USBCAN "eRob to PC Connector" to ensure a one-to-one correspondence.

Table 27-1 Troubleshooting and Solutions (continued)

Problem Classification	Alarm Prompt or Phenomenon	Possible Causes	Solutions
EtherCAT Communication Abnormality	1. Ethernet port indicator does not light up 2. Ethernet port indicator flashes for a while and then stops flashing.	1. Poor wiring of the EtherCAT bus; 2. Hardware failure of the eRob's PCB.	1. Check the wiring order and connectivity of the network cable to ensure a good connection.
EtherCAT Communication Abnormality	Communication failure or EtherCAT initialization error after changing the slave alias.	An invalid EEPROM configuration checksum, or an alias loaded after restart that differs from the intended configuration.	Follow step 8 in Section 27.2. Use a validated master tool to update the alias and CRC together, read back, and power-cycle to verify.

Software applicability: Power, wiring and mechanical checks apply to both applications. The eTuner steps and screenshots remain applicable to eTuner. For eTunerII scanning and CAN ID, see Section D.10; for self-test and fault records, see Section D.11.

27.1 Abnormal CAN Communication

27.1.1 "Check whether the drive is powered on" window pops up when clicking "connect" for test in eTuner

Follow the steps below when eTuner cannot be connected as shown in Table 27-1.

(1) **Check "Run LED" indicator status of eRob rotary actuator.**
When the eRob runs normally, the "Run LED" indicator is breathing and flashing. If the operation status is abnormal, the CAN communication cannot be connected.

(2) **Check the voltage and the wiring of the power supply when "Run LED" indicator status is abnormal.**
   (1) Check the positive and negative wiring sequence of the power supply, please refer to Section 6.1.
   (2) The voltage of power supply is DC24V~48V when the eRob works properly (For the permissible minimum input voltage, please refer to Section 3.3). Use a multi-meter to measure the voltage, check whether the voltage is within the voltage range.
   (3) Power off the power. Then connect the oscilloscope to measure waveform outputted by voltage at the moment of powering on. Check whether there is overvoltage phenomenon (>60V). Please refer to Section 3.2.

(3) **"Check whether the drive is powered on" window pops up when clicking "connect" for test in eTuner when "Run LED" indicator status is normal, check CAN wiring.**
   (1) Power off the eRob. Check the wiring between CAN interface and "eRob to PC Connector" of the eRob, please refer to Chapter 13. Make sure that the crimp terminals of the "eRob to PC Connector" and the CAN wire cores are connected effectively, the wiring sequence is correct, and the wires are conductive.
   (2) Unplug and plug the USB wires. Make sure the effective connection between USB wires, USBCAN "eRob to PC Connector" and computer USB interface.

(3) Power on the eRob, close and reopen the eTuner Setup Support Software V13.72, and click "Connect" for the connection test. Check whether the software identifies the eRob CAN ID normally.

(4) **If eTuner still reminds that "Check the driver is powered on", power off the rotary actuator and use a multimeter to measure the CAN interface resistance value of rotary actuator.**

The normal resistance measurement value:

- CAN_GND to CAN_L is 61kΩ~65kΩ;
- CAN_GND to CAN_H is 61kΩ~65kΩ;
- CAN_L to CAN_H is 2kΩ.

Figure 27-1 shows resistance readings from a normal CAN interface, whereas Figure 27-2 shows abnormal readings. If the resistance value is abnormal, please confirm whether the CAN wire is plugged or unplugged when powering on during operation. Plugging or unplugging CAN wire when it is powered can damage the CAN interface.



Figure 27-1 Normal CAN Interface Resistance Readings



Figure 27-2 Abnormal CAN Interface Resistance Readings

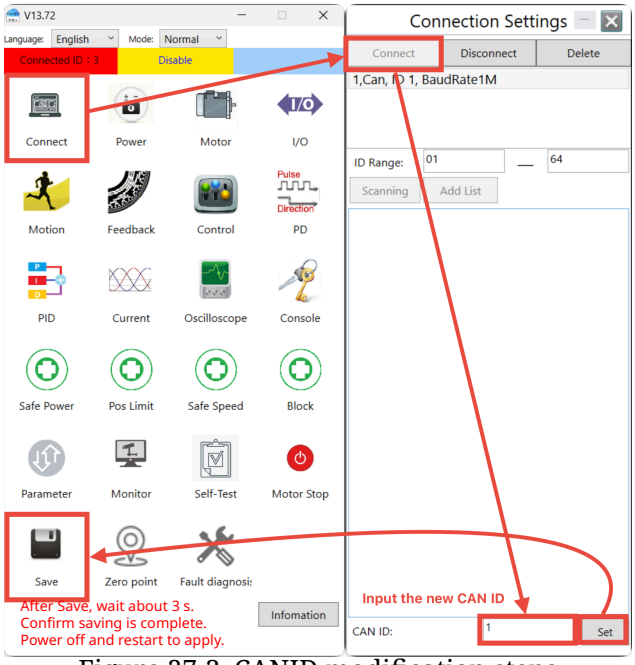

Figure 27-3 CANID modification steps

27.1.2 The number of CANID identified by eTuner connection test is less than the actual CANID number of connection

(1) Check the wiring between the eRob CAN interface and the eRob to PC Connector, and the wiring of the CAN interface between the eRob rotary actuators (please refer to Chapter 13 and Section 6.2). Make sure the wire correspondence is in sequence and the wires are conductive.
(2) Power off the eRob, and use the eRob to PC Connector to connect each eRob respectively. Then power on the eRob, connect to eTuner, and open the "Connection Settings" interface. Reset CANID (The steps are shown in Figure 27-3) to make sure the ID of each rotary actuator is unique.
(3) Power off the eRob, and re-cascade the CAN bus networking (refer to Section 6.2). Then power the eRob and open the connection interface in eTuner to repeat the connection test.

27.1.3 The data displayed on "Status Monitor" interface jumps abnormally when eTuner is connected.

(1) Check the wiring between the CAN interface of the eRob and the eRob to PC Connector, and the wiring of the CAN interface between eRob rotary actuators (please refer to Chapter 13 and Section 6.2). Make sure the wire correspondence is in sequence and the wires are conductive.
(2) Power off the eRob, and use the eRob to PC Connector connect each eRob respectively. Then power the eRob, connect to eTuner and open the "Connection Settings" interface. Reset CANID (The steps are as shown in Figure 27-3) to make sure the ID of each rotary actuator is unique.
(3) Power off the rotary actuator, and re-cascade the CAN bus networking (refer to Section 6.2). Then power the eRob and open the "Connection Setting" interface in eTuner to reconnect the test.

27.2 Abnormal EtherCAT Communication

(1) Please provide the brand and model of the EtherCAT master controller you are using, so that our technical support engineer can confirm if it is within the compatible range.
(2) Check the EtherCAT master controller and ensure it is functioning properly.
(3) Check the status of the "Run LED" indicator on the eRob module.
When the eRob is operating normally, the "Run LED" indicator should be in a breathing flashing state. If the indicator is not in the expected state, it may indicate a problem with the EtherCAT communication connection. Please refer to Section 5.1 for more details.
(4) If the status of the "Run LED" indicator is abnormal, check the power supply voltage and wiring:
    (1) Verify the correct polarity of the power supply connections. Refer to the Section 6.1 for guidance.
    (2) Make sure the eRob is powered within the range of DC24V~48V (refer to Section 3.3). Use a multimeter to measure the output voltage of the power supply and ensure it falls within this range.
    (3) Disconnect the power supply and use a physical oscilloscope to measure the voltage output waveform when the power switch is turned on. Confirm if there is any over-voltage impact (above 60V) as described in Section 3.2.
(5) If the power supply is normal and the "Run LED" is flashing correctly after power-up, but the "ECAT In LED" or "ECAT Out LED" is not lit, further check the EtherCAT wiring:
    (1) Verify the wiring order of the EtherCAT communication cable. Refer to the Section 6.3 and use a multimeter to confirm the connectivity. Check the connectors and cables for looseness, damage, deformation, or broken wires. Ensure the wiring order is correct, and the cables are securely fixed without any looseness.
    (2) Refer to Section 5.1 reconfirm the indicator LED status of the module. If the EtherCAT indicator LED is not lit, check the module's EtherCAT interface for looseness or damage.
(6) If all the above checks are normal, perform a complete power cycle by turning off the entire system, then power on the eRob module first and the controller second. Wait for the controller to finish initializing before confirming the communication connection.
Refer to eRob CANopen and EtherCAT User Manual *Section 5.1* for the operation sequence from power-on to servo enable.
(7) Perform cross-checks using a known-good eRob module and a known-good EtherCAT communication cable. Then follow step 6 to confirm whether EtherCAT communication is restored to normal.
(8) If communication fails after changing the EtherCAT slave alias, check the alias and the configuration checksum (TwinCAT example).
For TwinCAT installation, refer to Chapter 6 of the *eRob CANopen and EtherCAT User Manual*. Stop machine motion and keep the drive disabled. Confirm that the device and master software versions are a validated combination. Maintain stable power and communication throughout writing.
    (1) **Connect and identify the target slave.** Connect the PC EtherCAT port to ECAT IN and power on the module. Open the TwinCAT project in Config Mode. Scan under "I/O → Devices", select the correct network adapter, and scan the slaves. Select the target "Drive (ZeroErr Driver)", then open "EtherCAT → Advanced Settings⋯".
    (2) **Check access and the current alias.** Under "ESC Access → E²PROM", confirm that the master has EEPROM access and write permission. If the EEPROM is assigned to the

PDI, is write-protected, or reports an access error, resolve access using the procedure validated for that device. Contact technical support if this cannot be confirmed; do not continue writing. Under “Configured Station Alias”, “Actual Value (E²PROM)” is the stored alias and “Actual Value (Register)” is the loaded alias. These values may differ after writing and before restart; that difference alone does not establish a fault.

(3) **Read and back up.** Open “E²PROM → Hex Editor”, click “Upload”, and use “Write to File⋯” to save the original BIN. Record the device model, firmware version, master version, intended alias, and current error information.

(4) **Check the alias and configuration checksum.** Byte offsets `0x0008`–`0x0009` contain the alias, least-significant byte first. For example, decimal 1001 is `0x03E9`, stored as `E9 03`. Bytes `0x0000`–`0x000D` are covered by the configuration CRC stored at `0x000E`. Use a validated tool configured for the ESC configuration-area algorithm. Do not use an arbitrary CRC preset or a checksum copied from an example. This is not the Ethernet frame CRC.

(5) **Rewrite the alias and CRC together.** If the checksum is invalid, return to “Configured Station Alias”, enter the intended alias in “New Value”, and click “Write to E²PROM”. Use a compatibility-validated TwinCAT version or other EtherCAT master that updates both the alias and its CRC. Do not modify only the alias bytes. Wait for completion without errors.

(6) **Read back and power-cycle.** Click “Upload” again in Hex Editor. Verify the alias and CRC and save the resulting BIN. Keep power on for at least 10 seconds after writing completes, then power-cycle the module. Read both EEPROM and Register values again and confirm that both match the intended alias. With the master correctly configured, check whether “Online → Current State” returns to OP. OP indicates the communication state; it does not establish drive enablement or successful motion validation.

(7) **Retain evidence if the problem persists.** Send technical support the error screenshots, device and master versions, intended alias, and the before/after BIN files if writing fails, the values still differ after restart, or the slave cannot enter OP. Continue checking the other possible causes of the initialization error.

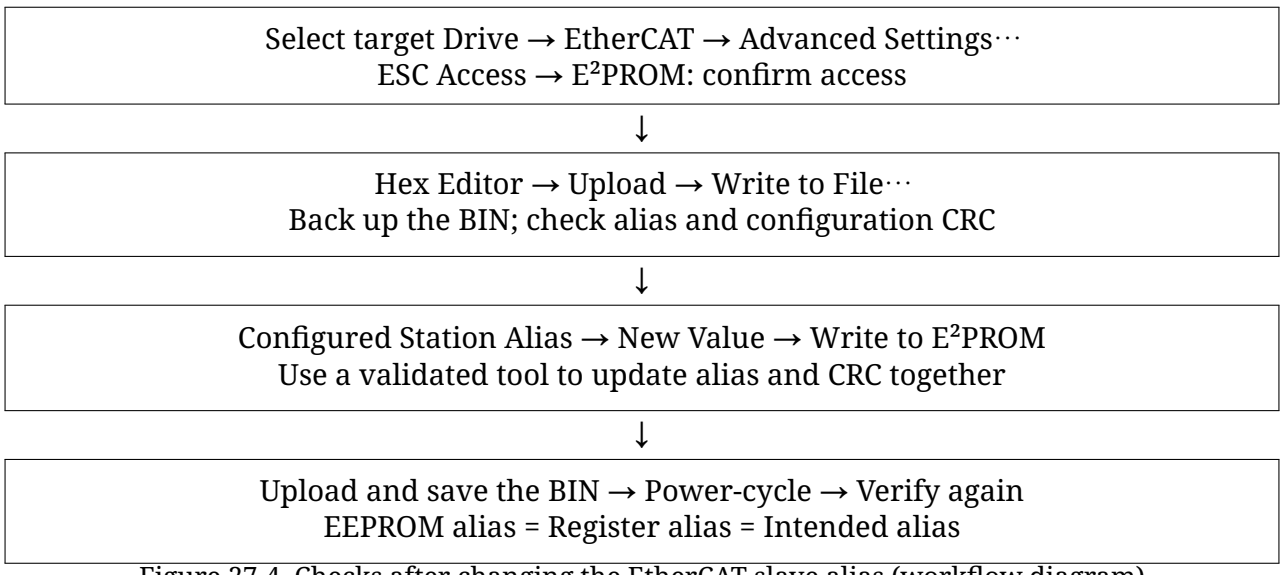

Figure 27-4 Checks after changing the EtherCAT slave alias (workflow diagram)

27.3 Motor Stalling Error

Software applicability: The V13.72 self-test steps, video and report directory below describe eTuner. Use Section D.11 for the eTunerII test scope and record directory.

For the reasons and handling instructions related to motor stalling error, please refer to *Section 7.2.10.* of the *eRob CANopen and EtherCAT User Manual*. You can follow the steps below for troubleshooting:

(1) Check whether the load torque applied to the output shaft of the affected eRob module exceeds the "Permissible Maximum Torque with Average Load" specified in Chapter 2, "eRob Specifications." Do not exceed this limit.

(2) Check for any interference between the connected part of the eRob module's output shaft and the external components. Use a feeler gauge to confirm that the installation clearance at the module's output end is normal, and eliminate any potential external interference.

(3) Use the self-check function in the eTuner Setup Support Software V13.72 to perform self-diagnostic tests and check if the module parameters and motion status are normal.

Note: Ensure that the module is in an unloaded state during the self-diagnostic test. If the module is not unloaded, only retrieve the module information without conducting the full test. If the error is displayed on the status monitoring interface of the eTuner Setup Support Software V13.72, clear the error by clicking the enable button on the motion interface, then click the motor stop button on the main interface before performing the self-diagnostic test. Refer to our official YouTube video: "Self Test Function of eTuner" for detailed instructions on using the self-check function. After the test, review the data in the eTuner self-check report folder (eTuner_V13.72\Self_check_report) to support analysis.

(4) Provide separate DC48V power supply to the eRob module. With the eRob in an unloaded and stationary state, enter the motor settings interface of the eTuner Setup Support Software V13.72 and click the release brake button (refer to Section 7.3 for detailed steps). Check whether the power output current exceeds the normal value after 3 seconds (refer to Table 7-5).

(5) If all the above checks are normal and the motor stalling error still persists, please contact our technical support for remote confirmation.

eTunerII: Self-Test and Test Records

Confirm no load, secure mounting and suitable motion space before using the Self-test page according to bundled help section 11. After testing, check results, cleanup and record-saving status; see Section D.11 for test scope and the record directory.

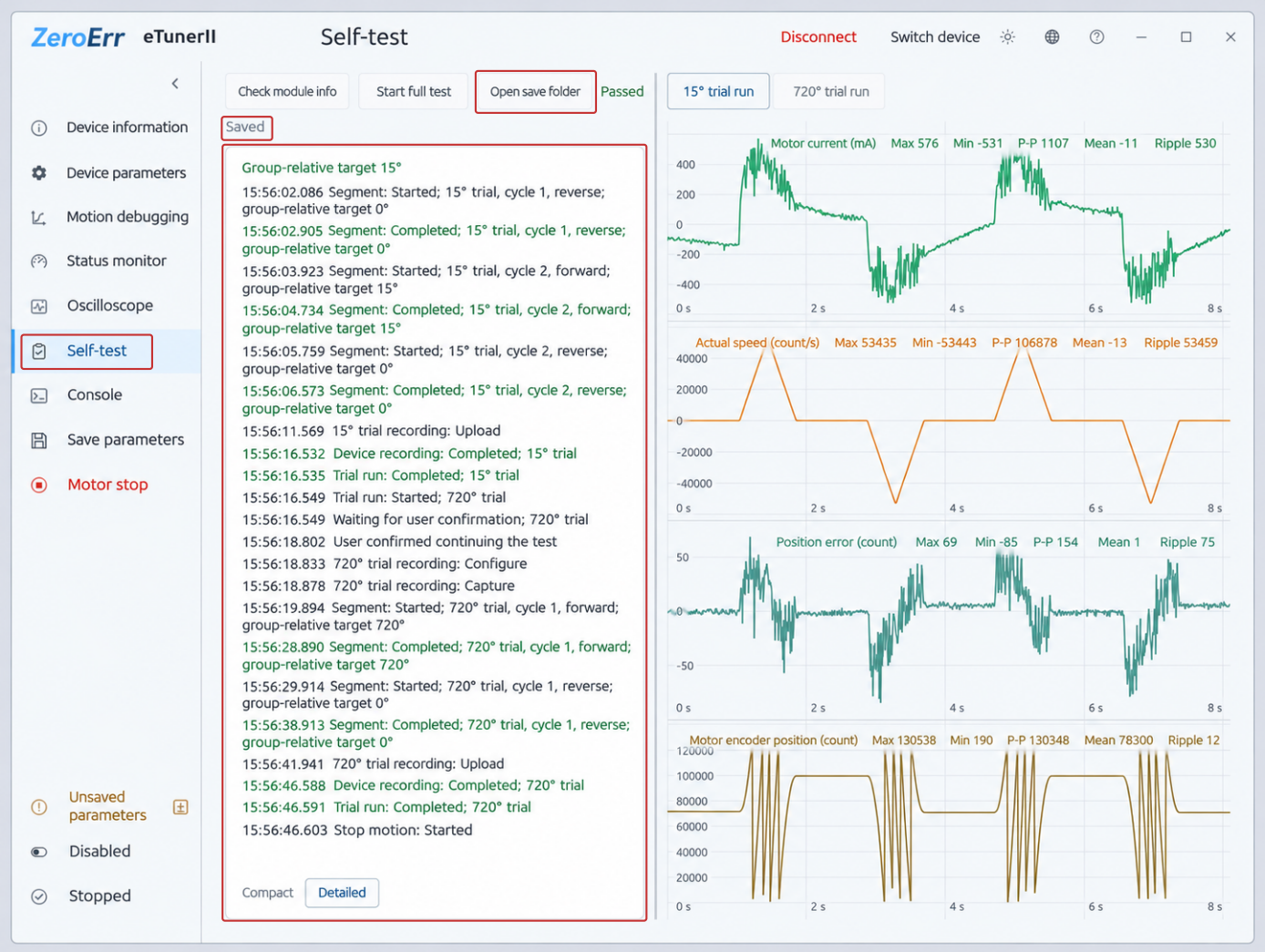

Figure 27-5 eTunerII Self-test (light theme)

Displayed values, states, waveforms and test results are examples, not recommended settings or acceptance criteria.

The left side displays test records and the Open save folder control; the right side shows trial-motion waveforms. This entry also applies when self-test is referenced from Section 27.4.

27.4 The Velocity Error Exceeds the Limit Value (Error HEX:0x8400, DEC:33792)

Software applicability: The automatic fault-triggered waveform procedure below describes eTuner. eTunerII has no fully equivalent automatic fault trigger; follow Section D.11 and record the capture conditions.

The reasons and handling instructions for the "Velocity Error Exceeds the Limit Value" can be found in the eRob CANopen and EtherCAT User Manual, *Section 7.2.24, "0x8400 (33792): Velocity Error Exceeds the Limit Value"*. Please refer to this manual for detailed information. You can follow the steps below for troubleshooting:

(1) Please verify whether the load torque of the eRob module's output shaft connection exceeds the "Permissible Maximum Torque with Average Load" specified in Section 2.2. It is important not to exceed this maximum value during usage.

(2) Check for any interference between the output shaft connection of the eRob module and the external components (load). Use a feeler gauge to ensure that the installation clearance of the module's output end is within the normal range and eliminate any potential external interference.

(3) Confirm whether the speed and acceleration of the target instruction trajectory planned by the main station controller exceed the maximum speed and acceleration specified in Table 12-1. It is crucial not to exceed this maximum value during usage.

(4) Please verify if the "Max Motor Speed" set in the eTuner Setup Support Software V13.72 "Safe Speed" interface is too low. If the "Max Motor Speed" setting is lower than the speed sent via the master controller, it can result in Velocity Error Exceeds the Limit Value.

(5) Utilize the "Self-Test" function in the eTuner Setup Support Software V13.72 to perform self-diagnostic tests and ensure that the module parameters and motion status are normal.

Note: Ensure that the module is in an unloaded state during the self-test. If the module is not unloaded, do not initiate full test, only retrieve the module information without conducting the full test. If an error is displayed in the "Monitor" interface of the eTuner Setup Support Software V13.72, clear the error by clicking the "Enable" button in the "Motion" interface, then click the "Motor Stop" button in the main interface before proceeding with the self-diagnostic test.

The instruction to utilize the self-test function of the eTuner, please refer to the YouTube Tutorial Video.

The test result will be saved to file path: eTuner_V13.72\Self_check_report, these data can assist the analysis process.

(6) Open the "Fault diagnosis" menu in eTuner, replicate the fault and data collection will be triggered. The oscilloscope will automatically collect relevant data (including target position 0x607A, actual velocity 0x606C, motor current, etc.) and plot the curve. You can save the curve and send it to our technical support for further analysis.

(7) If all the above checks are normal and the velocity error still exceeds the limit value, please contact our technical support for remote confirmation.

27.5 Position Feedback Value Misalignment After Power Cycle

Software applicability: The error-history procedure below describes eTuner. For eTunerII fault records, see Section D.11; for encoder resets, see Section D.5. CAN fault codes and the following 0x603F object error codes cannot be matched by numeral-base conversion alone.

1. For single-turn configurations with control-section position `S/HS`, follow these steps:

(1) Confirm the Position Feedback Value:
- Verify if the position feedback value of the eRob's operational travel range exceeds the single-turn position range limit (0~524287).
- Ensure that the eRob travel does not exceed one turn and that the position feedback value within the operational travel range does not cross the boundary positions (0 and 524287) of the single-turn encoder.
- For related precautions using single-turn eRobs, refer to Section 9.3.

(2) Adjust the Installation Position:
- If the eRob operational travel range does not exceed one turn but the position feedback value crosses the boundary position (0 or 524287), re-adjust the installation orientation of the eRob module. Alternatively, recalibrate the zero position using the method described in Section 9.5.1.

2. For multi-turn configurations with control-section position `M/HM`, follow these steps:

(1) Power OFF the eRob, then connect the eRob to the "eRob to PC Connector (formerly known as debugger)" (refer to Chapter 13).

(2) Power ON the eRob again, connect to the eTuner Setup Support Software V13.72 to check the status monitoring interface and historical error logs for any alarm information by clicking the "Monitor" button in the main menu.

(3) Check for Alarm Information:
- If there is no alarm information, first check if the alarm information has been cleared by the master controller (i.e., the master controller cleared the error by writing 0x80 to control word 0x6040).

(4) For Error Code 0x7314:
- If the error code is 0x7314, refer to Section 9.4 to perform the reset operation of the load encoder and confirm the zero position.

(5) For Error Code 0x730F:
- If the error code is 0x730F, further confirm the following:
  a. Check the Installation of the Multi-Revolution Count Battery:
  Ensure the Multi-Revolution Count Battery provided with the eRob is installed (do not modify the original battery wiring). Then, refer to Section 9.4 to perform the reset operation of the load encoder and confirm the zero position.
  b. Further Battery Check:
  If the Multi-Revolution Count Battery is installed and the reset operation has been performed, but after power cycling the error 0x730F still occurs, remove the battery and check it for damage or deformation. Check its connectors and wiring for looseness, damage, deformation, or broken wires. Use a multimeter to measure if the battery voltage is too low (<3.05V).
    i Replace the Battery if Any Abnormality is Found:
    If any abnormality is found in the battery or its connectors, including low voltage (<3.05V), replace the battery with a new one. Then, refer to Section 9.4 to perform the reset operation of the load encoder and confirm the zero position.
    ii Check the Resistance of the Multi-turn Battery Interface:
    If the battery and its connectors have no abnormalities and the battery voltage is normal (≥3.05V), use a multimeter to measure the resistance between

the two pins of the eRob multi-turn battery interface (note that this measurement should be taken when the eRob is POWERED OFF). The normal resistance value should be >16MΩ. If the resistance is abnormal, contact our technical support for remote confirmation.

NOTE: The eRob mechanical zero-point calibration function is supported by firmware version X3071220X or above.

27.6 Abnormal RS485 (Modbus) Communication

1. Provide the Brand and Model of the Modbus Master Controller to Our Technical Support for Confirmation:
   Please supply the brand and model of the Modbus master controller being used for our technical support to verify.
2. Check the RUN_LED Indicator Status:
   When the eRob is operating normally, the RUN_LED indicator should be in a breathing flash state. If the status is abnormal, RS485 (Modbus) communication cannot connect.
3. If the RUN_LED Indicator Status is Abnormal, Check the Power Supply Voltage and Wiring:
   (1) Check the Polarity of the Power Supply Wiring:
   Ensure the correct polarity of the power supply wiring according to Section 6.1.
   (2) Verify the Power Supply Voltage:
   The operating power supply voltage for the eRob drive should be DC 24V~48V (see Section 3.3 for the permissible minimum input voltage value). Use a multimeter to measure if the output voltage of the power supply is within this range.
   (3) Check for Overvoltage Surges:
   Power off the supply, connect a physical oscilloscope, and measure the voltage output waveform at the moment the power switch is turned on to confirm if there are overvoltage surges (>60V). Refer to Section 3.2.
4. If the Power Supply is Normal and the RUN_LED Indicator Flashes Normally After Powering On, Further Confirm the Following:
   (1) Verify the RS485 Communication Cable Wiring Order:
   Refer to Section 6.4. Use a multimeter to ensure continuity, check for loose, damaged, deformed, or broken connectors, and ensure the wiring order is correct and secure.
   (2) Check the RS485 Communication Interface on the eRob:
   Ensure the RS485 communication interface on the eRob is not loose or damaged.
5. Check the Communication Parameter Configuration:
   Verify the communication parameter configurations for both the eRob and the Modbus master serial port. Refer to Chapter 3 in the “eRob Modbus-RTU Communication Application Manual”.
6. Verify the Communication Commands:
   Ensure that the commands sent by the Modbus master comply with the protocol format specified in Chapter 1 in the “eRob Modbus-RTU Communication Application Manual”. Control commands can be referenced from Chapter 5 in the “eRob Modbus-RTU Communication Application Manual”.

7. If All the Above Checks are Normal, Proceed with the Following Steps:
   Power off the entire system, then power on the eRob first, followed by the Modbus master controller. After the controller initialization is complete, check the communication connection status. Refer to Section 5.1 in the "eRob CANopen and EtherCAT User Manual" for the power-on-to-servo-enable operation sequence.
8. If Modbus Communication Still Cannot Connect, Measure the RS485 Interface Resistance on the eRob:
   Ensure the eRob is powered off and no cables are connected during the measurement. Use a multimeter to measure the resistance, the normal resistance value:
   - RS485-A to RS485-B is 0.9KΩ~1.1KΩ;
   - RS485-A to GND is 1.8KΩ~2KΩ;
   - RS485-B to GND is 0.9KΩ~1.1KΩ.

   If the resistance values are abnormal, confirm whether the RS485 communication cable was hot-plugged during use, as hot-plugging (cable manipulation while power on) can easily damage the RS485 interface.

Chapter 28 About Rigidity

28.1 Rigidity

Fixing the input side (wave generator) and applying torque to the output side (flexspline) generates torsion almost proportional to the torque on the output side.

Figure 28-1a shows the torsional angle quantity on the output side when the torque applied on the output side starts from 0, increases up to $+T_0$ and decreases down to $-T_0$. This is called the "Torque-torsional angle diagram", which normally draws a loop of 0—A—B—A'—B'—A. The slope described in the "Torque-torsional angle diagram" is represented as the spring constant for the rigidity of eRob rotary actuators (unit:Nm/rad).

As shown in Figure 28-1b, this "Torque-torsional angle diagram" is divided into 3 partitions, and the spring constants in the area are represented as K_1, K_2 and K_3.

K_1 — The spring constant when the torque changes from 0 to T_1.
K_2 — The spring constant when the torque changes from T_1 to T_2.
K_3 — The spring constant for torque above T_2.

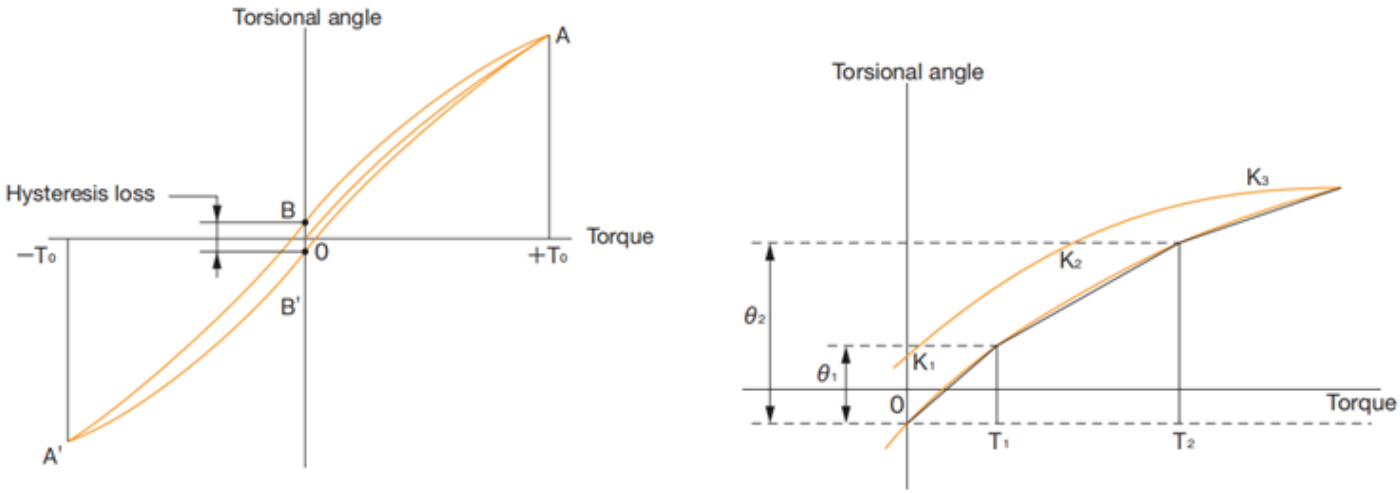

(a) Torque-torsional angle diagram (b) Partitioning of spring constant diagram

Figure 28-1 Diagrams

References: *Harmonic Drive General catalog.*

Table 28-1 Partitioning of Spring Constant

Item \ Series Code			eRob70F	eRob70	eRob80F	eRob80	eRob90	eRob110	eRob110H HD[V6]	eRob142	eRob170
T_1		Nm	2	2	3.9	3.9	7	14	14	29	54
		kgfm	0.2	0.2	0.4	0.4	0.7	1.4	1.4	3	5.5
T_2		Nm	6.9	6.9	12	12	25	48	48	108	196
		kgfm	0.7	0.7	1.2	1.2	2.5	4.9	4.9	11	20
GR 50	K_1	×10⁴ Nm/rad	0.29	0.34	0.67	0.81	1.3	2.5	—	5.4	10
		kgfm/arcmin	0.085	0.1	0.2	0.24	0.38	0.74	—	1.6	3
	K_2	×10⁴ Nm/rad	0.37	0.47	0.88	1.1	1.8	3.4	—	7.8	14
		kgfm/arcmin	0.11	0.14	0.26	0.32	0.52	1	—	2.3	4.2
	K_3	×10⁴ Nm/rad	0.47	0.57	1.2	1.3	2.3	4.4	—	9.8	18
		kgfm/arcmin	0.14	0.17	0.34	0.4	0.67	1.3	—	2.9	5.3
	θ_1	×10⁻⁴ rad	6.9	5.8	5.8	4.9	5.2	5.5	—	5.5	5.2
		arcmin	2.4	2	2	1.7	1.8	1.9	—	1.9	1.8
	θ_2	×10⁻⁴ rad	19	16	14	12	15.4	15.7	—	15.7	15.4
		arcmin	6.4	5.6	4.6	4.2	5.3	5.4	—	5.4	5.3
GR ≥ 80	K_1	×10⁴ Nm/rad	0.4	0.47	0.84	1	1.6	3.1	3.1	6.7	13
		kgfm/arcmin	0.12	0.14	0.25	0.3	0.47	0.92	0.92	2	3.8
	K_2	×10⁴ Nm/rad	0.44	0.61	0.94	1.4	2.5	5	5	11	20
		kgfm/arcmin	0.13	0.18	0.28	0.4	0.75	1.5	1.5	3.2	6
	K_3	×10⁴ Nm/rad	0.61	0.71	1.3	1.6	2.9	5.7	5.7	12	23
		kgfm/arcmin	0.18	0.21	0.39	0.46	0.85	1.7	1.7	3.7	6.8
	θ_1	×10⁻⁴ rad	5	4.1	4.6	3.9	4.4	4.4	4.4	4.4	4.1
		arcmin	1.7	1.4	1.6	1.3	1.5	1.5	1.5	1.5	1.4
	θ_2	×10⁻⁴ rad	16	12	13	9.7	11.3	11.1	11.1	11.6	11.1
		arcmin	5.4	4.2	4.3	3.3	3.9	3.8	3.8	4	3.8

28.2 Torsional Quantity Calculation Example

For an eRob110H configuration with a reduction ratio of 100, calculate the torsional deflection (θ) caused by the load.

(1) **When the load torque is extremely small (T_{L1}=2.9 Nm)**
As the torque is T_1 or less, angular displacement θ_{L1} is represented as follows.

$$\theta_{L1} = \frac{T_{L1}}{K_1} \tag{28.1}$$

$$\theta_{L1} = \frac{2.9}{3.1 \times 10^4}$$

$$\theta_{L1} = 9.4 \times 10^{-5} rad\ (0.33 arc\ min)$$

(2) **When the load torque is between T_1 and T_2 (T_{L2}=39 Nm)**
As the torque between T_1 and T_2, angular displacement θ_{L2} is represented as follows.

$$\theta_{L2} = \theta_1 + \frac{T_{L2} - T_1}{K_2} \tag{28.2}$$

$$\theta_{L2} = 4.4 \times 10^{-4} + \frac{39 - 14}{5.0 \times 10^4}$$

$$\theta_{L2} = 9.4 \times 10^{-4} rad\ (3.2 arc\ min)$$

The total angular displacement when the load is applied the other way round will be double the quantity obtained above plus the backlash quantity.

Note: This torsional deflection is for the rotary actuator alone and excludes deflection of the output flange and similar components.

28.3 Hysteresis Loss

As shown in Figure 28-1a, when the torque is applied up to the rated value and is brought back to “0”, the torsional angle does not become absolutely “0”, and a small amount remains (B—B’). This is called hysteresis.

Table 28-2 Hysteresis loss quantity by series code

Gear Ratio	Unit \ Series Code	eRob70F	eRob70	eRob80F	eRob80	eRob90	eRob110	eRob142	eRob170
50	$\times 10^{-4}$ *rad*	7.3	5.8	5.8	5.8	5.8	5.8	5.8	5.8
	arc min	2.5	2.0	2.0	2.0	2.0	2.0	2.0	2.0
≥ 80	$\times 10^{-4}$ *rad*	5.8	2.9	2.9	2.9	2.9	2.9	2.9	2.9
	arc min	2.0	1.0	1.0	1.0	1.0	1.0	1.0	1.0

28.4 Backlash

As hysteresis loss is mainly generated by internal friction, it is hardly generated, and only a small allowance is represented in the diagram when the torque is extremely small. This quantity is expressed as the backlash quantity.
As the allowance of the tooth engagement is suppressed to “0” for the gear, the backlash quantity is caused by the clearance of the connection of mechanical structures.

Chapter 29 Back-Driving by External Force

(1) The actuator can be rotated with a small external force under the condition of motor disabled and the brake released separately (please refer to Section 7.3 for more details), because there is still friction and the magnetic induction force produced by motor dragging and the magnetic induction force is that the greater the rotation speed, the greater the resistance, so it is necessary to apply a torque with the help of a certain force arm to rotate the joint.
(2) Use the torque mode (CST mode or PT mode), set the target torque (object dictionary 0x6071) to 0, and then enable the actuator. At this time, the external force required to rotate the actuator by external force is smaller than that of releasing the brake alone.
(3) If you want to further reduce the drag force, the usual method is to first identify the friction force and load gravity of the actuator through the drag teaching function of the controller, and then send commands to the actuator through the torque feed-forward (object dictionary 0x60B2) to compensate the friction force and load gravity.
(4) You can use the torque sensor of the actuator (please refer to Chapter 23) as a feedback of the external force, and after the calculation and processing of the force by the controller, send commands to the actuator through the torque feed-forward (object dictionary 0x60B2) for compensation.

Note: For the instructions of CST mode and PT mode, refer to *Chapter 5* of *eRob CANopen and EtherCAT User Manual*, and for the object dictionary description, refer to *Section 8.2* of *eRob CANopen and EtherCAT User Manual*.

Appendix A Safety Precautions for Multi-Turn Encoder Battery

(1) Do not place the battery at random to prevent short circuit.
(2) Do not heat or place the battery in an environment of 100°C.
(3) Do not charge the battery.
(4) Do not disassemble and dissect the battery.
(5) Do not use the positive and negative electrodes in reverse connection with the electrical equipment.
(6) Do not use a soldering iron directly on the battery surface to solder or contact other high-temperature objects.
(7) Do not perform various environmental and safety tests such as extrusion and impact without any protective conditions.
(8) Do not put the battery into water or use or store it in a humid environment without protection.
(9) Do not use the battery in the equipment without setting the cut-off voltage point. After reaching the cut-off voltage point, it must be removed from the equipment immediately to prevent the deep discharge of continuous current operation.
(10) Do not use the battery if you find any heat, odor, discoloration, deformation or other abnormality in the battery during use or storage.
(11) Dispose of the used battery in accordance with local environmental regulations, buried deep in the ground or thrown into salt water.
(12) Rinse with plenty of water and seek medical treatment immediately if the liquid inside the battery splashes on the skin, eyes and clothes.
(13) Do not use and store battery in the place with static electricity.
(14) Store battery in an environment where the temperature does not exceed 30°C and the relative humidity is 45% ~ 75%.
(15) Store battery away from heat sources, away from corrosive gas environments, and avoid direct sunlight, and ensure that the storage area is clean, cool, dry and ventilated.
(16) Keep battery in their original packaging when not in use, and the batteries should not be piled up after removing the packaging.
(17) Protect battery from sunlight, fire, rain, water and corrosive substances during transportation.
(18) Limit the shock and vibration during transportation and handling to a minimum.
(19) Place battery away from the engine when the battery is transported long-distance by ship; Do not leave in an unventilated environment for a long time in summer.

Appendix B Error Codes and Suggestions

Please refer to *Section 7.2 Device Error* in *eRob CANopen and EtherCAT User Manual* for more details.

Appendix C eRob Mass, Center-of-Mass, and Inertia Parameters

C.1 Parameter and Coordinate-System Definitions

This appendix lists the mass, center-of-mass (COM) coordinates, and inertia parameters of eRob series rotary actuator modules. The data can be used for robot-arm dynamic modeling, simulation, product selection, and control-system parameterization. Parameters are listed separately by series code, form factor, structural-version code, and holding-brake state.

Units Used in This Appendix	**Mass: kg; center-of-mass coordinates: mm; inertia tensor: $g \cdot mm^2$.**
Output coordinate system	All center-of-mass coordinates in this appendix are referenced to origin O of the output coordinate system for the corresponding series code and structural-version code; the inertia parameters are also referenced to origin O. Origin O is located at the center of the mounting-flange end face. For I-Type configurations, the positive X-axis is aligned with the actuator axis and points in the spindle direction. The module is approximately axisymmetric overall; no common radial orientation is specified for the Y- and Z-axes. For T-Type configurations, the positive X-axis points toward the spindle, the positive Y-axis points toward the base, and the positive Z-axis is determined by the right-hand rule.
Inertia tensor	This appendix lists the six independent components Ixx, Iyy, Izz, Ixy, Ixz, and Iyz. The remaining tensor components are obtained from symmetry, as shown in the matrix below.
Holding-brake state	The “With Brake” and “Without Brake” variants of the same series code and structural-version code are listed as separate configurations and must not be used interchangeably.

Arrangement of the inertia-tensor components:

Ixx	Ixy	Ixz
Ixy	Iyy	Iyz
Ixz	Iyz	Izz

C.2 70 Series

Table C-3 70 Series Mass and Center-of-Mass Parameters

Series / Structural Code	Holding-Brake State	Mass (kg)	X (mm)	Y (mm)	Z (mm)
eRob70F V3	Without Brake	0.77	30.04	0.19	0.01
eRob70F V3	With Brake	0.83	29.6	0.15	0.01
eRob70F V4	Without Brake	0.63	21.24	-0.02	0.06
eRob70F V4	With Brake	0.74	25.32	-0.08	0.06
eRob70I V4	Without Brake	0.87	35.93	0.13	-0.17
eRob70I V4	With Brake	0.93	35.77	0.12	-0.15
eRob70I V5	Without Brake	0.82	31.94	-0.07	-0.17
eRob70I V5	With Brake	0.88	32.15	0.05	-0.24
eRob70T V4	Without Brake	1.18	40.19	2.77	-0.07
eRob70T V4	With Brake	1.24	40.06	2.62	-0.06

Table C-4 70 Series Inertia-Tensor Parameters (Unit: $g \cdot mm^2$)

Series / Structural Code	Holding-Brake State	Ixx	Iyy	Izz	Ixy	Ixz	Iyz
eRob70F V3	Without Brake	520054.43	1251938.35	1249100.7	7983.94	309.34	-773.58
eRob70F V3	With Brake	532264.27	1280736.98	1277482.84	6437.51	570.51	-795.91
eRob70F V4	Without Brake	401479.98	574126.52	575570.54	-458.29	1754.07	0.88
eRob70F V4	With Brake	466860.42	877378.51	879520.73	-1873.41	1883.51	526.54
eRob70I V4	Without Brake	553919.93	1745217.29	1746080.13	6820.43	-8797.33	1583.28
eRob70I V4	With Brake	575510.24	1829955.27	1830820	6756.12	-8730.43	1616.98
eRob70I V5	Without Brake	526844.9	1412704.85	1413634.92	-3516.8	-8948.56	90.07
eRob70I V5	With Brake	537626.06	1483538.64	1486159.73	495.67	-12041.24	-1050.02
eRob70T V4	Without Brake	934700.01	2997312.27	3055846.40	153197.16	-5576.05	780.34
eRob70T V4	With Brake	955610.80	3098889.83	3157219.00	152791.69	-5421.69	875.15

C.3 80 Series

Table C-5 80 Series Mass and Center-of-Mass Parameters

Series / Structural Code	Holding-Brake State	Mass (kg)	X (mm)	Y (mm)	Z (mm)
eRob80F V4	Without Brake	0.89	25.6	0.32	-0.03
eRob80F V4	With Brake	0.95	25.79	0.3	-0.03
eRob80I V5	Without Brake	1.19	36.14	0.12	-0.07
eRob80I V5	With Brake	1.25	36.1	0.11	-0.07
eRob80I V6	Without Brake	1.03	29.34	-0.08	0.09
eRob80I V6	With Brake	1.09	29.72	-0.08	0.08
eRob80T V5	Without Brake	1.88	44.33	2.64	0
eRob80T V5	With Brake	1.94	43.59	2.54	0

Table C-6 80 Series Inertia-Tensor Parameters (Unit: $g \cdot mm^2$)

Series / Structural Code	Holding-Brake State	Ixx	Iyy	Izz	Ixy	Ixz	Iyz
eRob80F V4	Without Brake	765607.49	1149382.33	1158942.53	13742.27	-1192	451.47
eRob80F V4	With Brake	783436.55	1208856.48	1218343.89	13884.77	-1177.72	467.63
eRob80I V5	Without Brake	896928.43	2566450.56	2565097.78	9752.7	-5974.24	1336.17
eRob80I V5	With Brake	917911.1	2654931.67	2653626.15	9589.38	-6185.57	1246.83
eRob80I V6	Without Brake	867115.76	1588048.58	1585473.06	-4402.49	5012.04	165.06
eRob80I V6	With Brake	891140.10	1689008.76	1686316.60	-4692.43	5065.94	226.61
eRob80T V5	Without Brake	1817724.51	5498533.75	5585185.47	247060.43	-28.28	-214.31
eRob80T V5	With Brake	1850752.06	5590792.39	5672951.14	248504.24	1530.39	-263.71

C.4 90 Series

Table C-7 90 Series Mass and Center-of-Mass Parameters

Series / Structural Code	Holding-Brake State	Mass (kg)	X (mm)	Y (mm)	Z (mm)
eRob90I V3	Without Brake	1.75	42.062	0.055	-0.093
eRob90I V3	With Brake	1.87	41.816	0.053	-0.09
eRob90I V6	Without Brake	1.506	35.258	0.125	0.055
eRob90I V6	With Brake	1.639	35.5	0.083	0.063
eRob90T V3	Without Brake	2.48	48.7	3.11	0.02
eRob90T V3	With Brake	2.6	48.38	2.94	0.02

Table C-8 90 Series Inertia-Tensor Parameters (Unit: $g \cdot mm^2$)

Series / Structural Code	Holding-Brake State	Ixx	Iyy	Izz	Ixy	Ixz	Iyz
eRob90I V3	Without Brake	1755620	5104739	5106169	7871	-12505	1923
eRob90I V3	With Brake	1828460	5351397	5352981	7948	-12740	1980
eRob90I V6	Without Brake	1611896.2	3332470.13	3338675.857	12842.86	9153.623	681.696
eRob90I V6	With Brake	1712965.103	3633827.048	3636388.207	11206.837	10053.431	638.521
eRob90T V3	Without Brake	3159593.03	9321410.36	9460607.34	448261.52	-868.97	-2466.52
eRob90T V3	With Brake	3231356.07	9607576.93	9746778.78	448054.78	-655.67	-2359.84

C.5 110 Series

Table C-9 110 Series Mass and Center-of-Mass Parameters

Series / Structural Code	Holding-Brake State	Mass (kg)	X (mm)	Y (mm)	Z (mm)
eRob110I V4	Without Brake	2.88	47.865	0.024	0.068
eRob110I V4	With Brake	3.06	47.717	0.023	0.067
eRob110I V6	Without Brake	2.57	38.06	0.03	-0.06
eRob110I V6	With Brake	2.68	38.4	0.02	-0.06
eRob110T V4	Without Brake	4.31	59.34	4.23	-0.02
eRob110T V4	With Brake	4.49	59.08	4.09	-0.02

Table C-10 110 Series Inertia-Tensor Parameters (Unit: $g \cdot mm^2$)

Series / Structural Code	Holding-Brake State	Ixx	Iyy	Izz	Ixy	Ixz	Iyz
eRob110I V4	Without Brake	3831329	11120578	11125705	5073	16071	-1318
eRob110I V4	With Brake	3903858	11433582	11438857	5106	16328	-1337
eRob110I V6	Without Brake	3983724.16	6771662.07	6773309.32	1276.36	-11110.94	-1406.28
eRob110I V6	With Brake	4054239.65	7074559.72	7076162.17	-714.37	-11994.09	-1845.72
eRob110T V4	Without Brake	7859752.57	23582224.33	23983461.29	1340070.48	-11604.81	1766.47
eRob110T V4	With Brake	7932281.31	23979335.11	24380530.78	1340312.33	-11423.88	1693.37

C.6 142 Series

Table C-11 142 Series Mass and Center-of-Mass Parameters

Series / Structural Code	Holding-Brake State	Mass (kg)	X (mm)	Y (mm)	Z (mm)
eRob142I V4	Without Brake	6.49	61.216	-0.168	-0.176
eRob142I V4	With Brake	6.7	61.067	-0.162	-0.17
eRob142T V4	Without Brake	8.01	68.67	5.23	-0.02
eRob142T V4	With Brake	8.22	68.44	5.1	-0.02

Table C-12 142 Series Inertia-Tensor Parameters (Unit: $g \cdot mm^2$)

Series / Structural Code	Holding-Brake State	Ixx	Iyy	Izz	Ixy	Ixz	Iyz
eRob142I V4	Without Brake	16780319	40969373	40910769	-128335	-136569	8627
eRob142I V4	With Brake	16917503	41723532	41664810	-128026	-136453	8574
eRob142T V4	Without Brake	25527620	62841200	63813840	3678450	-480	-3100
eRob142T V4	With Brake	25665340	63676520	64649110	3678170	-680	-3180

C.7 170 Series

Table C-13 170 Series Mass and Center-of-Mass Parameters

Series / Structural Code	Holding-Brake State	Mass (kg)	X (mm)	Y (mm)	Z (mm)
eRob170I V3	Without Brake	9.29	59.397	0.116	0.152
eRob170I V3	With Brake	9.5	59.526	0.114	0.149

Table C-14 170 Series Inertia-Tensor Parameters (Unit: $g \cdot mm^2$)

Series / Structural Code	Holding-Brake State	Ixx	Iyy	Izz	Ixy	Ixz	Iyz
eRob170I V3	Without Brake	30919000	60810000	60759000	135000	195000	-7000
eRob170I V3	With Brake	31058000	61696000	61644000	135000	195000	-7000

Appendix D eTunerII Operating Guide

D.1 Scope and Task Index

This manual provides instructions for both eTuner and eTunerII. Chapter 14 introduces eTunerII; this appendix explains the functional differences. Select the procedure for the application in use. Product wiring, power supply, mechanical travel, load and firmware requirements continue to apply.
The eTuner interfaces and V13.72 paths are operating examples, not a statement of the latest release. The eTunerII interface images are operating examples. Light and dark screenshots both show eTunerII. Check the help supplied with the installed version; functions, signals and parameter files must not be assumed equivalent between applications.

Opening the help

Use the help control on the eTunerII title bar, or open `help/index.html` in a browser. Keep the complete `help` folder and its `images` subfolder for offline use. Use the section numbers and corresponding functions in the bundled help.

Selecting a procedure

Task	eTuner and product instructions	eTunerII
Installation and connection	Chapter 13; Section 27.1	Section D.2
Editing, applying and saving	eTuner steps in each functional chapter	Section D.3
Brake operation and current checks	Sections 7.3.1 and 7.4	Section D.4
Position, encoders and mechanical zero	Chapter 9; battery reset instructions	Section D.5
Speed conversion and trial motion	Chapters 12 and 15	Section D.6
PID, excitation and waveform capture	Chapter 16; ratcheting waveform example	Section D.7
STO configuration	Chapter 22	Section D.8
Pulse-direction (PD) control	Chapter 25	Section D.9
CAN ID and connection checks	Section 27.1	Section D.10
Self-test, faults and records	Chapter 27	Section D.11
Factory restore and parameter files	Chapter 21; eTuner parameter-file operations	Section D.12

Use the corresponding operating instructions for CANopen/EtherCAT master applications, TwinCAT and firmware-update tools.

D.2 Installation and Connection

Follow Chapters 6 and 13 for wiring. The eTuner procedure uses connection settings, connection testing, adding to the list and connection. For eTunerII:

(1) Start `etuner2.exe`. On the device-selection page, expand Scan devices.
(2) Select device type eRob and communication type CAN, then use Scan and add.
(3) Click the target device card to connect.
(4) In Device information, check the model, firmware version and CAN ID.

In the eTunerII example, the USB-to-CAN driver is `drivers/erob/DriverSetup64.exe`. Keep the accompanying files in the same directory; do not use the eTuner example directory to locate this file.

Detailed operations and interface illustrations: eTunerII bundled help, section 01 and 02, Preparation and First connection, including disconnecting, reconnecting and switching devices.

Connection behavior: Device cards are local records and do not indicate that a device is currently online. This version uses a fixed 1 Mbps communication rate and connects to one target device at a time.

D.3 Parameter Editing, Saving and Common Entries

For eTuner, use the Apply control in the setting window and Save on the main interface as described in the functional chapters. For eTunerII:

(1) Open the relevant group under Device parameters and edit the fields.
(2) Open Parameter management and review all pending changes.
(3) Apply the changes and confirm successful application.
(4) Select Save parameters in the main navigation and wait for successful saving.

Editing creates local drafts. Apply submits valid drafts from all groups; Save parameters writes them to device Flash. Editing a field or merely waiting about three seconds does not confirm saving. Brake and encoder direct commands follow the separate requirements in Section D.4 and Section D.5.

Detailed operations and interface illustrations: eTunerII bundled help, section 05, Editing and saving parameters: completing a parameter change and reviewing pending changes.

Function	eTunerII entry under Device parameters
Single-/multi-turn identification	Encoder → load end → Use multi-turn absolute position (read-only)
Bus-voltage limits	Safe power → maximum/minimum permissible bus voltage
Position protection	Position protection → lower/upper position limit
Operating mode and control source	Control mode → operating mode/control source
PID	PID
Speed limit	Safe speed → maximum permissible speed
Digital inputs and STO	I/O configuration
Continuous current	Safe power → continuous current

Use multi-turn absolute position identifies the device configuration and is read-only in this version. It cannot convert single-turn hardware to multi-turn hardware.

Voltage units

The product instructions use V; the eTuner screenshots and eTunerII safe-power parameters use mV. The 57.2 V and 46.8 V examples correspond to 57200 and 46800 mV; 26.4 V and 21.6 V correspond to 26400 and 21600 mV. Check the displayed unit before entry. The model, supply and voltage-range conditions in Chapter 3 still determine whether an example applies.

D.4 Releasing and Engaging the Brake

The eTuner procedure is in Section 7.3.1. For eTunerII, confirm that the motor has stopped and is disabled, and remove or securely support the load. Open Device parameters → Motor settings. Use Release brake, read the prompt and confirm. To restore the brake command, use the resulting Engage brake control.

Detailed operations and interface illustrations: eTunerII bundled help, section 05, Editing and saving parameters: releasing and engaging the brake.

The eTunerII brake controls execute commands directly; Apply and Save parameters are not required. Engage brake requests disabling. The button wording is not proof of the mechanical brake state; check the device. For Section 7.4, continue to measure the power-supply output current. Motor current in Status monitor is not a substitute.

D.5 Position Feedback and Encoder Operations

Reading position feedback

For eTuner, see Section 9.2. In eTunerII Status monitor, read Position and Load encoder position. Use the floating status window when monitoring across pages. Check encoder type, software resolution and single-/multi-turn configuration under Device parameters → Encoder.
Position, Load encoder position and Motor encoder position are different signals. They are not interchangeable and must not be read directly as angles. See Figure 9-2A and bundled help section 10, Status and fault diagnosis.

Resetting the load encoder

Follow the battery checks and connection requirements in this manual, and confirm that the motor has stopped and is disabled. For eTunerII, use Device parameters → Encoder → Reset load encoder. Wait for command confirmation, check faults and position feedback, and reconfirm the mechanical zero.
The command is available only for devices confirmed to have load-end multi-turn operation enabled. It does not set the current position to a specified value, and does not automatically save parameters or restart the device.

Calibrating the mechanical zero

For the eTuner instructions, see Section 9.5. For eTunerII, use Device parameters → Encoder → Reset current position:

(1) Move to the user-defined mechanical zero using the trial-motion procedure in Section D.6.
(2) Stop motion, confirm standstill and disable the motor.
(3) Reset the current position. The single-turn target is fixed at 262144 count. The multi-turn target accepts a signed 32-bit value, with a default of 262144 count. When following the single-turn-range example in this manual, select within 0–524287.
(4) Wait for parameter readback confirmation, then save parameters and wait for success. This reset command itself does not require Apply.
(5) Power-cycle as required by this manual, reconnect and verify the actual position feedback at the same mechanical position.

Parameter readback does not replace the final position check after restart. The X3071220X-or-later firmware requirement continues to apply.

Detailed operations and interface illustrations: eTunerII bundled help, section 05, Editing and saving parameters: encoder reset and Reset current position.

Position protection

For eTunerII, open Device parameters → Position protection, set the lower and upper position limits, and apply and save according to Section D.3. Determine the limits from actual mechanical travel and encoder configuration; see Section 9.6.

D.6 Trial Motion

For eTuner, use Chapter 15. For eTunerII, first check Device parameters → Safe speed, then open Motion debugging → Parameter command. Secure the actuator and confirm suitable load and motion space. Enter speed, acceleration and deceleration, confirm the device state, then enable the motor before issuing a motion command. Start at low speed. Use Chapter 12 for speed conversion. See Figures 15-3 and D-1.

Detailed operations and interface illustrations: eTunerII bundled help, section 07, Motion debugging: parameter commands for position/speed motion, stopping motion and stopping the motor.

Position is in count, speed in count/s, acceleration/deceleration in count/s², and reciprocation waiting time in ms. eTunerII does not automatically convert RPM or angular velocity to device units. The 524288 count/revolution formula applies only to the corresponding 19-bit configuration.

Operation	eTunerII action
Absolute-position motion	Enter the target and use Move to target position.
Relative motion	Enter a positive increment; use the positive/negative direction control in the relative-position area.
Reciprocating motion	Enable reciprocation and set the waiting time.
Velocity jog	With continuous motion off, hold a direction control; release, pointer exit or loss of focus requests stopping.
Continuous velocity motion	Enable continuous motion and select a direction. Use Stop motion to finish.
Decelerate the current motion	Use Stop motion. This does not itself disable the motor.
Disable the motor	After standstill, use Motor stop in the main navigation and check the actual brake/device state.

Ordinary page changes do not stop continuous motion. For a normal stop, use Stop motion to decelerate, confirm standstill, then use Motor stop to disable and check the brake state. The eTunerII motion page has no Jerk field or switch to apply acceleration/deceleration limits to all motion. If these settings are needed, configure them from the external controller according to the applicable communication manual; do not transfer the eTuner switch procedure directly to eTunerII.

eTunerII: Motion debugging



Figure D-1 eTunerII: Motion debugging (dark theme)

Both the light and dark themes shown in this manual belong to eTunerII. Follow the operating conditions in the corresponding text.

Displayed values, states, waveforms and test results are examples, not recommended settings or acceptance criteria.

D.7 PID Tuning and Waveform Capture

For the eTuner procedures and response illustrations, see Chapter 16. eTunerII separates the functions: PID parameters are under Device parameters → PID; excitation is under Motion debugging → Curve command; full waveform capture is under Oscilloscope in the main navigation. See Figures 16-5 and D-2.

Before tuning, follow the load-placement requirements in Chapter 16, confirm standstill and disable the motor. In Device parameters → Control mode, select Position for the operating mode and Not used for the control source, check and apply. Current-loop parameters are factory-set and do not need adjustment.

Speed-loop tuning

(1) Change the speed-loop gain and integral parameters under Device parameters → PID, then apply.
(2) In Oscilloscope → Configure charts, add Speed command and Actual speed to the same chart.
(3) Select 0.5 ms sampling; select Speed command not equal to 0 as the conditional trigger and set trigger position to 0%. Start capture and wait for the trigger.
(4) In Motion debugging → Curve command, confirm the enabled state, select speed excitation and a square or sine waveform, enter amplitude/frequency, and run.
(5) Review the waveform, stop motion and disable before the next adjustment. Save parameters after tuning is complete.

Use the original frequency and amplitude recommendations only within their stated mechanical conditions. This eTunerII version accepts integer amplitudes.

Position-loop tuning

Use the same sequence, changing position-loop gain, capturing Position command and Actual position, and selecting position excitation. Speed command not equal to 0 can still be used as the trigger; the trigger signal does not have to be included in a recorded chart.

Sampling: 500 microseconds/point equals 0.5 ms. With two signals of 4000 points each, the record is approximately two seconds. Duration depends on sampling interval and signal count; it is not a separate duration entry. Adding signals shortens the record; check the predicted duration shown by the software. Do not assume eTuner's Target value (amplitude-limited) and eTunerII's Position command or Speed command have identical meanings.

Use help sections 05 (parameter changes), 07 (excitation) and 09 (device recording and export). Section 08 covers real-time oscilloscope observation, which does not save the complete historical samples.

Dynamic PID changes through EtherCAT

For eTunerII, enable Allow bus PID adjustment under Device parameters → PID, apply and save. The external EtherCAT master then changes parameters using the SDO method in Section 16.3. Before returning to eTunerII tuning, disable that option, apply and save, then refresh and check parameters. eTunerII grants the permission; the external master performs the SDO operations.

eTunerII: Oscilloscope

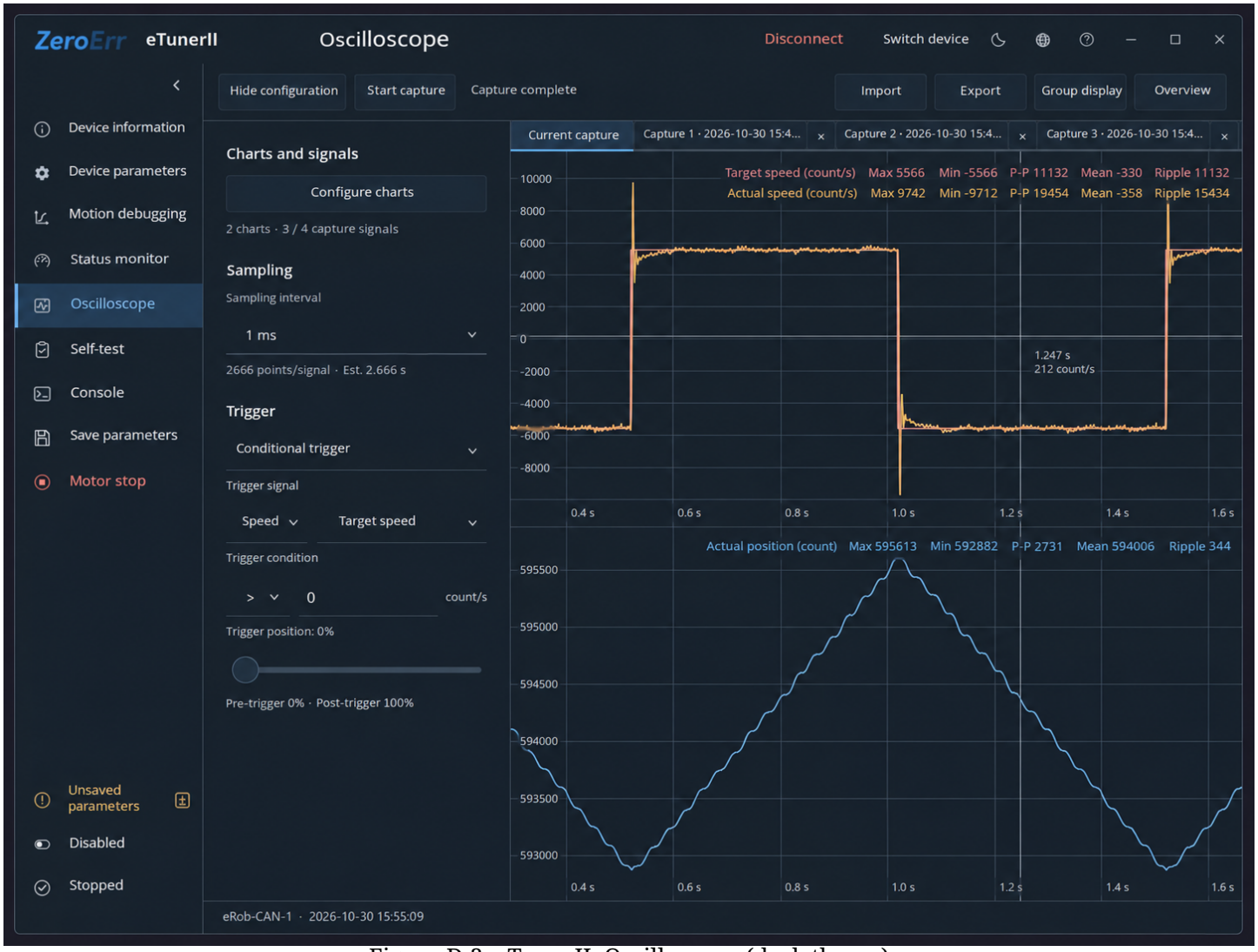

Figure D-2 eTunerII: Oscilloscope (dark theme)

Both the light and dark themes shown in this manual belong to eTunerII. Follow the operating conditions in the corresponding text.

Displayed values, states, waveforms and test results are examples, not recommended settings or acceptance criteria.

The screenshot includes Start capture and Target speed labels. Follow the help for the installed release when locating controls and selecting signals.

D.8 STO Configuration

The wiring and product safety requirements in Chapter 22 continue to apply. The eTuner I/O figures show the selections 2 for one STO branch and 3 for two branches. For eTunerII, first confirm standstill and the disabled state; set Control source to Not used in Device parameters → Control mode, then open I/O configuration.

Configuration	eTunerII settings
One STO branch	Set digital input 1 to STOA; select One branch for the STO configuration.
Two STO branches	Set digital input 1 to STOA and digital input 2 to STOB; select Two branches for the STO configuration.

Check, apply and save, then verify the actual function according to the product safety instructions. eTunerII offers Off, One branch and Two branches. Do not enter the eTuner display numbers 2 or 3 as eTunerII setting values.

Detailed operations and interface illustrations: eTunerII bundled help, section 05, Editing and saving parameters.

D.9 Pulse-Direction Control

For eTuner, see Chapter 25. For eTunerII, configure direction/gearing, mode activation and external enable separately. The wiring, enable assignment, restart and mechanical requirements in that chapter still apply.

Direction, gearing and pulse monitoring

In Device parameters → PD control, set PD input logic and the gear-ratio numerator and denominator; apply and save. For the 19-bit example with 1000 input pulses per revolution, the numerator can be 524288 and denominator 1000. Read received pulses under Status monitor → Pulse position.

Enabling PD mode

The eTunerII PD page has no pulse-direction mode switch. Direction and gearing alone do not activate the mode. Before starting control, the external controller must set `MotionMode` to 4, using the applicable communication manual. Do not use this value directly as the mode value of an unrelated protocol object.

External enable and profile parameters

Follow the wiring example: in Device parameters → I/O configuration, assign Enable to digital input 3, configure inversion, apply and save, then power-cycle as required. The same enable function can be assigned to only one of DIn03, DIn04, DIn05 and DIn06.

Set external PD profile speed, acceleration and deceleration from the external controller according to the applicable communication manual. Do not click eTunerII motion-direction controls merely to write these parameters: those controls start software motion.

Detailed operations and interface illustrations: eTunerII bundled help, section 05 and 10, Editing and saving parameters; Status and fault diagnosis.

D.10 CAN ID and Connection Troubleshooting

The power, RUN_LED, CAN wiring and interface-resistance checks in Section 27.1 continue to apply. eTuner uses its connection-test procedure; eTunerII uses Scan and add to rediscover devices. See bundled help section 13, Common questions, for driver issues or devices in use by another application.

For duplicate-ID checks, power off, connect devices individually, then power up and connect. To change CAN ID in eTunerII Device information:

(1) Confirm that the motor has stopped and is disabled, then select the edit icon beside CAN ID.
(2) Enter a unique ID from 1 to 63 and confirm.
(3) Save parameters, wait for success, power-cycle, then rescan and reconnect.

The previous communication ID remains in use until restart. The number of local device cards, historical records or newly added cards does not replace the number of devices actually found in the current scan.

Detailed operations and interface illustrations: eTunerII bundled help, section 04, Device information and CAN ID: changing the CAN ID.

D.11 Self-Test and Fault Evidence

Faults and history

For eTuner, use the status-monitor and error-history procedures in Chapter 27. For eTunerII, open Status monitor → Fault diagnosis and use help section 10. Fault records for the current connection contain only faults observed during that connection and are cleared on disconnect; they are not permanent device history.

eTunerII CAN fault codes cannot be mapped to the `0x603F` object error codes by numeral-base conversion alone. Keep the original displayed code, text, device information and reproduction conditions. Encoder operations are covered in Section D.5.

Self-test, scope and record directory

The eTuner video, procedure and `eTuner_V13.72/Self_check_report` directory apply to eTuner. For eTunerII, use bundled help section 11, Self-test and test records, including the full-test and record-location instructions. Confirm no load, secure mounting and sufficient motion space before starting the Self-test page. After testing, check the results, cleanup and whether records were saved. See Figures 27-5 and D-3.

With a load attached, view Device information only; do not run full motion tests. This version does not enable factory-parameter comparison. Checking module information or passing a full test does not prove that parameters match factory values.

Records are stored in `%LOCALAPPDATA%\eTuner2\selftest`. Use Open save folder to locate `log.txt`, `waveform-*.csv` and `summary.json`. Waveforms can be opened through Oscilloscope → Import.

Capturing velocity-error and other fault waveforms

The eTuner procedure in Section 27.4 has no fully equivalent automatic fault-trigger entry in eTunerII. Fault diagnosis does not start recording automatically, and Fault code is not an available trigger source in this version.

(1) In Oscilloscope → Configure charts, select Position command, Actual speed and Motor current, using separate charts for different units.
(2) Set the sampling interval. Use immediate capture or a suitable conditional trigger; prepare capture before reproducing the problem.
(3) Export CSV after capture, and PNG if an image is needed. Provide the records with device information, fault codes and reproduction steps to technical support.

Detailed operations and interface illustrations: eTunerII bundled help, section 09, Device recording and export.

Manual capture cannot guarantee the same event timing as eTuner's fault-triggered recording. Record the software, trigger settings, sampling conditions and reproduction actions.

eTunerII: Self-test

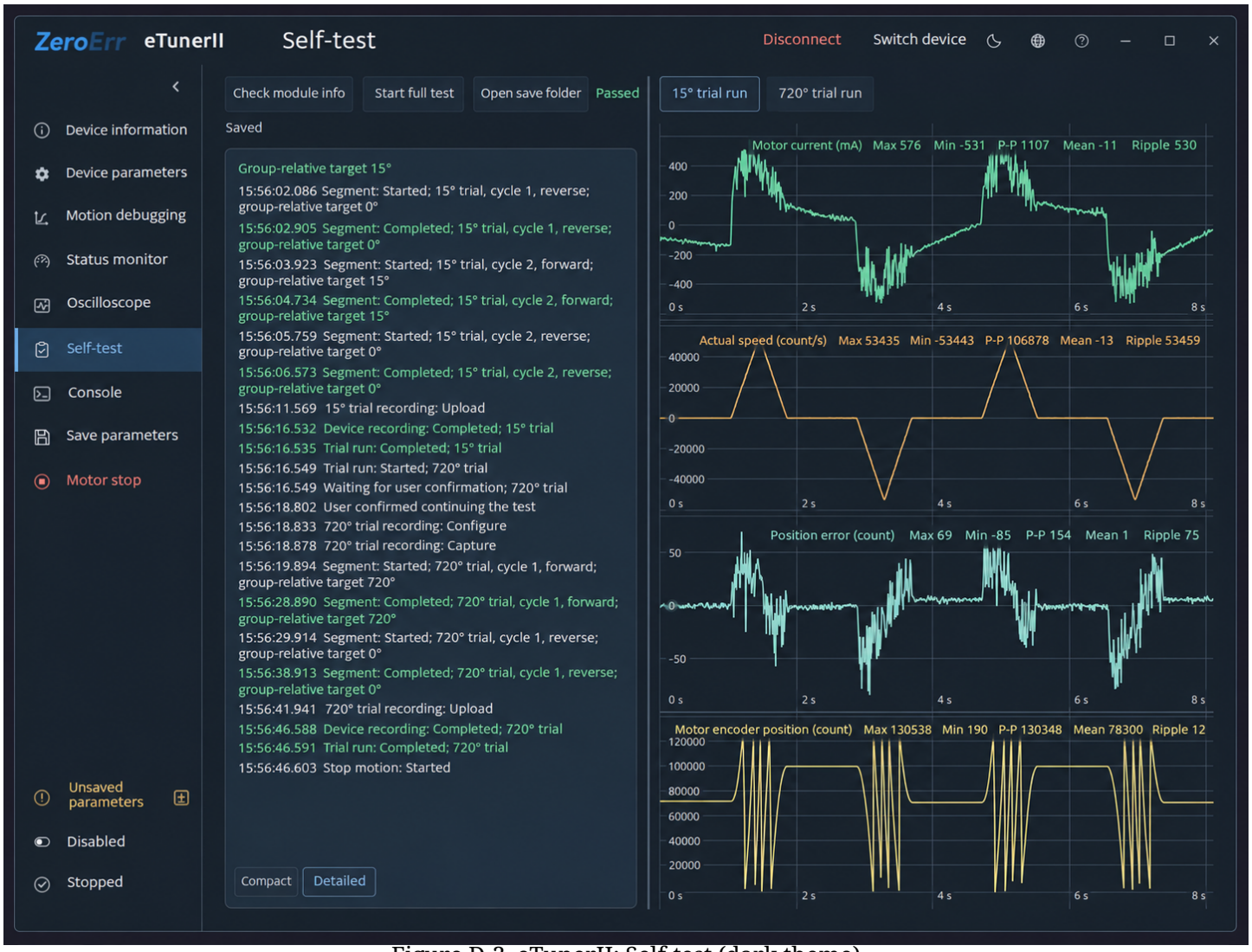

Figure D-3 eTunerII: Self-test (dark theme)

Both the light and dark themes shown in this manual belong to eTunerII. Follow the operating conditions in the corresponding text.

Displayed values, states, waveforms and test results are examples, not recommended settings or acceptance criteria.

D.12 Factory Restore and Parameter Files

Restoring factory parameters

For eTuner, use Chapter 21. In eTunerII, open Device parameters → Parameter management → Restore factory parameters:

(1) Confirm the restore operation, wait for confirmation that the restore request was saved, and disconnect.
(2) Power-cycle, rescan and reconnect.
(3) Verify the result, save parameters again and wait for successful saving.

Detailed operations and interface illustrations: eTunerII bundled help, section 12, Restoring factory parameters.

The delivery-date, firmware-version and applicability conditions in Chapter 21 remain in force. Factory restore does not upgrade firmware; Chapter 20 still uses the corresponding firmware-update tool.

Saving parameter files on the computer

Use the instructions for the installed eTuner version when working with its parameter files. For eTunerII import/export, use help section 06, Importing and exporting parameter files. Saving to device Flash and exporting a computer file are separate operations.

Export scope and compatibility: This version exports a fixed set of 17 tuning parameters, not a complete device backup. It cannot completely back up STO, PD, voltage limits, CAN ID or encoder offsets. Importing `.json` requires an exact firmware-version match, followed by applying and saving. Do not assume eTuner files are compatible with eTunerII.

Matching instructions to the release

For complete steps and interface illustrations, open `help/index.html` in the software package and find the cited sections. Brake commands, encoder resets, the bus-PID option and the PD page may differ between releases; check that the installed version provides the required entry. When using eTuner, follow the eTuner procedures and figures in the relevant functional chapters.

Appendix E Warranty

E.1 Warranty Period and Scope

1. Within a period of seven (7) days from the day following the customer's reception of the product, in the event of non-human-induced performance failure, subject to confirmation by the ZeroErr After-Sales Service, the customer shall be entitled to initiate an exchange procedure. The customer is required to furnish a valid purchase receipt.
2. From eight (8) days to three hundred sixty-five (365) days after the customer's receipt of the product, upon verification by the ZeroErr After-Sales Service that the issue pertains to an inherent quality fault of the product, priority replacement service shall be granted. It is to be noted that this product undergoes a series of stringent factory tests, and ZeroErr reserves the right to decline the customer's requests for return or exchange in cases where the issue does not originate from an inherent quality fault of the product.
3. When the product is operated, used, and maintained in accordance with the specifications and instructions specified in the technical documentation, manuals, and catalog, the warranty period shall be eight (8) days to three hundred sixty-five (365) days after the customer's receipt of the product or two thousand (2000) hours of operation, whichever occurs first. Exceeding either of these durations will result in the loss of warranty eligibility.

E.2 Warranty Terms

This limited warranty does not apply to any product that has been subject to:

1. Disassembling, modification or repair by others than ZeroErr;
2. User's misapplication, improper installation, inadequate maintenance, or misuse;
   - ① Unauthorized disassembly of the eRob rotary actuator, resulting in damage to the tamper-evident seal;
   - ② Occurrence of product abnormalities subsequent to conducting destructive tests, including but not limited to extreme temperature variations, humidity exposure, overloading, submersion, electromagnetic compatibility (EMC) testing, vacuum testing, and similar assessments;
   - ③ Any abnormal product performance or damage resulting from the failure to operate the product in accordance with the user manual provided by ZeroErr;
   - ④ Issues related to power interfaces, including but not limited to detachment, looseness, melting, or poor contact, as well as issues related to communication interfaces, including but not limited to detachment or looseness;
   - ⑤ Damage to threaded mounting interfaces, including stripped threads or broken screws;
   - ⑥ Severe impact damage characterized by external damage exceeding 3mm in any direction, or the presence of protrusions or depressions exceeding 0.02mm;
   - ⑦ Occurrence of collisions during either loaded or unloaded operation;
   - ⑧ Damage to circuit protection devices or electrostatic discharge (ESD) protection circuits, including but not limited to fuses, current-limiting resistors, current-limiting resistors for CAN or RS485 communication interfaces, and transient voltage suppression (TVS) diodes;
   - ⑨ Product performance issues discovered after seven (7) days, including but not limited to noise, jittering, vibration, and accuracy insufficiency, which are influenced by various factors such as installation compliance, design reasonableness, repeated assembly and disassembly, transportation, wear and tear during normal use;
3. Imperfection caused by something other than the product;
4. Disaster or other occurrences that do not belong to the responsibility of ZeroErr

Our liability shall be limited to the product as found by ZeroErr to be defective. ZeroErr shall not be liable for consequential damages of other equipment caused by the defective product, and shall not be liable for the incidental and consequential expenses and labor costs associated with disassembly and installation to the driven equipment.

Declaration

Our product is not designed or intended for use outside the environmental limitations and operating parameters expressly stated on the product's datasheet. Products are not designed or intended for use in medical, military, aerospace, automotive or oil, gas applications or any safety-critical applications where a failure of the product could cause serious environmental or property damage, personal injury, or death. Any use in such applications must be specifically agreed to by the seller in writing and is subject to such additional terms as the seller may impose in its sole discretion. Use of products in such applications is at buyer's own risk, and buyer will indemnify and hold harmless seller and its affiliates against any liability, loss, damage, or expense arising from such use. Information contained in this datasheet was derived from product testing under controlled laboratory conditions and data reported thereon is subject to the stated, then to tolerances and variations, or if none are stated, then to tolerances and variations consistent with usual trade practices and testing methods. The product's performance outside of laboratory conditions, including when one or more operating parameters is at its maximum range, may not conform to the product's datasheet. Further, information in the product's datasheet does not reflect the performance of the product in any application, end-use or operating environment buyer or its customer may put the product to. Seller and its affiliates make no recommendation, warranty, or representation as to the suitability of the product for buyer's application, use, end-product, process, or combination with any other product or to any results buyer or its customer might obtain in their use of the product. Buyer should use its own knowledge, judgment, expertise, and testing in selecting the product for buyer's application, end-use and/or operating environment, and should not rely on any oral or written statement, representation, or samples made by seller or its affiliates for any purpose. Except for the warranties expressly set forth in the seller's terms and conditions of sale, seller makes no warranty express or implied with respect to the product, including any warranty of merchantability or fitness for any particular purpose, which are disclaimed and excluded. All sales are subject to seller's exclusive terms and conditions of sales which, where the seller is another person, are available on request, and in each case, are incorporated herein by reference, and are exclusive terms of sale. Buyer is not authorized to make any statements or representations that expand the environmental limitations and operating parameters of the products, or which imply permitted usage outside of that expressly stated on the datasheet or agreed to in writing by seller. ZeroErr has made considerable effort to ensure the content of this document is correct at the date of publication but makes no warranties or representations regarding the content. ZeroErr excludes liability, howsoever arising, for inaccuracies in this document.

ZEROERR CONTROL CO., LTD.

About Us



ZeroErr was founded in December 2016 in ShenZhen, China. ZeroErr stands for Zero Error Motion Control.
We design, develop and manufacture rotary actuators and encoders which are widely used in the automation industry, collaborative robots, surgical robots and bionic robots. Thousands of customer groups worldwide use simple combinations of our products in a wide range of applications.
ZeroErr is committed to providing reliable quality standard production, cost-effective products and quick response technical support, enabling our customers to accelerate innovation, improve productivity and achieve extraordinary application performance.

ZeroErr

Address: Bldg 1, Unit 4, Dejin Industrial Park,
40 Fuyuan 1st Road, Fuhai St, Bao'an,
Shenzhen, Guangdong, P.R.China

Sales Support: marketingdirector@zeroerr.cn +86-13602607132
overseas_dpt@zeroerr.cn +86-19166212693

Technical Support: otss@zeroerr.cn +86-18922807806

Advice & Complaint: network@zeroerr.cn

Global Support

Visit our website to contact your nearest sales representative.
www.zeroerr.com